LCFC Confidential

CG520 NM-A804
M/B Schematics Document
Intel Braswell M-Processor with DDRIIIL

2015-10-11

REV:1.0

Security Classification	LC Future Center Secret Data		
Issued Date	2015/10/08	Deciphered Date	2015/03/23

THIS SHEET OF ENGINEERING DRAWING IS THE PROPRIETARY PROPERTY OF LC FUTURE CENTER. AND CONTAINS CONFIDENTIAL AND TRADE SECRET INFORMATION. THIS SHEET MAY NOT BE TRANSFERED FROM THE CUSTODY OF THE COMPETENT DIVISION OF R&D DEPARTMENT EXCEPT AS AUTHORIZED BY LC FUTURE CENTER NEITHER THIS SHEET NOR THE INFORMATION IT CONTAINS MAY BE USED BY OR DISCLOSED TO ANY THIRD PARTY WITHOUT PRIOR WRITTEN CONSENT OF LC FUTURE CENTER.

Title: Cover Page

Size: Custom | Document Number: CG520 | Rev: 1.0

Date: Tuesday, December 08, 2015 | Sheet 1 of 57

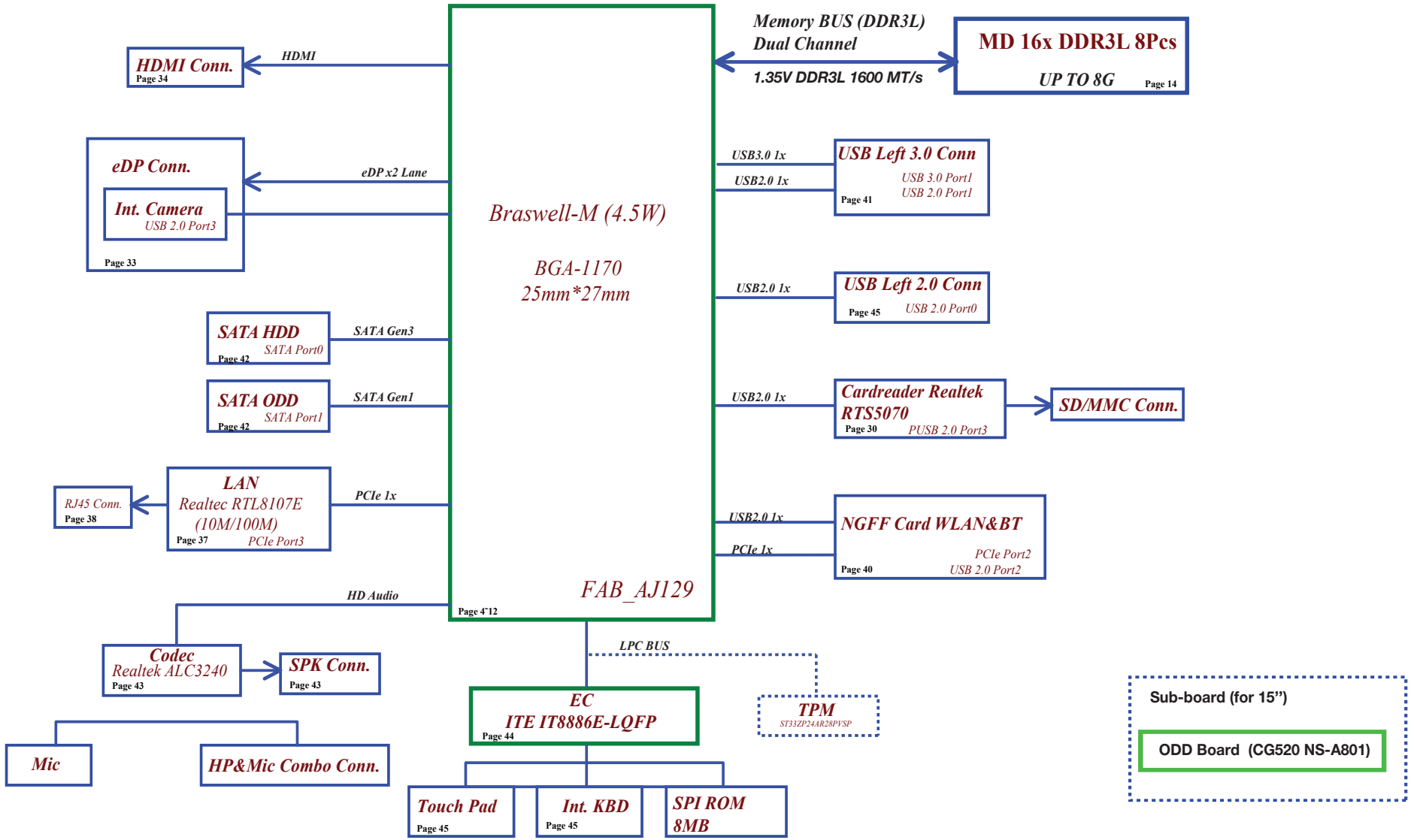

Security Classification	LC Future Center Secret Data		
Issued Date	2015/10/08	Deciphered Date	2015/03/23

THIS SHEET OF ENGINEERING DRAWING IS THE PROPRIETARY PROPERTY OF LC FUTURE CENTER. AND CONTAINS CONFIDENTIAL AND TRADE SECRET INFORMATION. THIS SHEET MAY NOT BE TRANSFERED FROM THE CUSTODY OF THE COMPETENT DIVISION OF R&D DEPARTMENT EXCEPT AS AUTHORIZED BY LC FUTURE CENTER NEITHER THIS SHEET NOR THE INFORMATION IT CONTAINS MAY BE USED BY OR DISCLOSED TO ANY THIRD PARTY WITHOUT PRIOR WRITTEN CONSENT OF LC FUTURE CENTER.

Title: **Block Diagram**

Size	Document Number	Rev
Custom	CG520	1.0

Date: Tuesday, December 08, 2015 | Sheet 2 of 57

Voltage Rails (O --> Means ON , X --> Means OFF)

Power Plane / State	B+ +3VL	+3VALW +5VALW	+3VALW_SOC +1.0VALW +1.8VALW	+1.35V	+5VS +3VS +1.5VS +0.68VS CPU_CORE GFX_CORE
S0	O	O	O	O	O
S3	O	O	O	O	X
S5 S4/AC Only	O	O	O	X	X
S5 S4 Battery only	O	X	X	X	X
S5 S4 AC & Battery don't exist	X	X	X	X	X

STATE \ SIGNAL	SLP_S1#	SLP_S3#	SLP_S4#	+VALW		+V	+VS	Clock
Full ON	HIGH	HIGH	HIGH	ON	ON	ON	ON	ON
S1(Power On Suspend)	LOW	HIGH	HIGH	ON	ON	ON	ON	LOW
S3 (Suspend to RAM)	LOW	LOW	HIGH	ON	ON	ON	OFF	OFF
S4 (Suspend to Disk)	LOW	LOW	LOW	ON	ON	OFF	OFF	OFF
S5 (Soft OFF)	LOW	LOW	LOW	ON	ON	OFF	OFF	OFF

STATE \ SIGNAL	SLP_S1#	SLP_S3#	SLP_S4#	SLP_S5#	+VALW	+V	+VS	Clock
Full ON	HIGH	HIGH	HIGH	HIGH	ON	ON	ON	ON
S1(Power On Suspend)	LOW	HIGH	HIGH	HIGH	ON	ON	ON	LOW
S3 (Suspend to RAM)	LOW	LOW	HIGH	HIGH	ON	ON	OFF	OFF
S4 (Suspend to Disk)	LOW	LOW	LOW	HIGH	ON	OFF	OFF	OFF
S5 (Soft OFF)	LOW	LOW	LOW	LOW	ON	OFF	OFF	OFF

USB Port Table

XHCI	Port	Port device
USB 3.0	0	USB Port (Left Side)
	1	USB3.0 Card Reader
USB 2.0	0	USB Port (Left Side)
	1	USB Port (Right Side)
	2	BT
	3	Camera
	4	USB Port (Right Side)
USB HUB	1	
	2	
	3	
	4	

BOM Structure Table

BOM Structure	BTO Item
AOAC@	AOAC support part
OPT@	GPU Part
UMA@	UMA SKU ID part
14@	For 14" part
15@	For 15" part
100M@	100M LAN part
N15SGT@	N15SGT Part
N15VGM@	N15GSM Part
GIGA@	GIGA LAN Part
GC6@	GPU GC6 Part
TS@	Touch Screen part
RANKA@	GPU VRAM RANKA PART
RANKB@	GPU VRAM RANKB PART
ME@	Connector
CD@	COST DOWN
@	Not stuff
H4T@	Hynix VRAM Part
M4T@	Micron VRAM Part
S4T@@	Samsung VRAM Part

SMBUS Control Table

	SOURCE	VGA	BATT	IT8986E	SODIMM	WLAN WiMAX	Thermal Sensor		Module	charger
EC_SMB_CK1 EC_SMB_DA1	EC +3VALW	X	V	V +3VALW	X	X	X	X	X	V
EC_SMB_CK2 EC_SMB_DA2	EC +3VS	V +3VGS	X	V +3VS	X	X	V +3VS	X	X	X
PCH_SMB_CLK PCH_SMB_DATA	PCH +3VALW_PCH	X	X	X	V +3VS	V +3VS	X	V +3VALW_PCH	X	X

PCIE PORT LIST

Port	Device
1	Discrete GPU
2	Discrete GPU
3	WLAN
4	LAN
5	
6	
7	
8	

DDI PORT LIST

Port	Device
DDI0	DP TO VGA
DDI1	eDP
DDI2	HDMI

EC SM Bus1 address

Device	
Smart Battery	0001 011X b
Charger	need to update

EC SM Bus2 address

Device	Address
Thermal Sensor EMC1403-2	1001_100xb(reserve)
VGA	0x9E(base on NV default)

PCH SM Bus address

Device	Address
DDR DIMMA	1010 000Xb
Wlan	Rsvd
TP	need to update

Security Classification	LC Future Center Secret Data		
Issued Date	2015/10/08	Deciphered Date	2015/03/23

THIS SHEET OF ENGINEERING DRAWING IS THE PROPRIETARY PROPERTY OF LC FUTURE CENTER. AND CONTAINS CONFIDENTIAL AND TRADE SECRET INFORMATION. THIS SHEET MAY NOT BE TRANSFERED FROM THE CUSTODY OF THE COMPETENT DIVISION OF R&D DEPARTMENT EXCEPT AS AUTHORIZED BY LC FUTURE CENTER NEITHER THIS SHEET NOR THE INFORMATION IT CONTAINS MAY BE USED BY OR DISCLOSED TO ANY THIRD PARTY WITHOUT PRIOR WRITTEN CONSENT OF LC FUTURE CENTER.

Title: Notes List

Size: Custom | Document Number: CGx20 | Rev: 1.0

Date: Tuesday, December 08, 2015 | Sheet 3 of 57

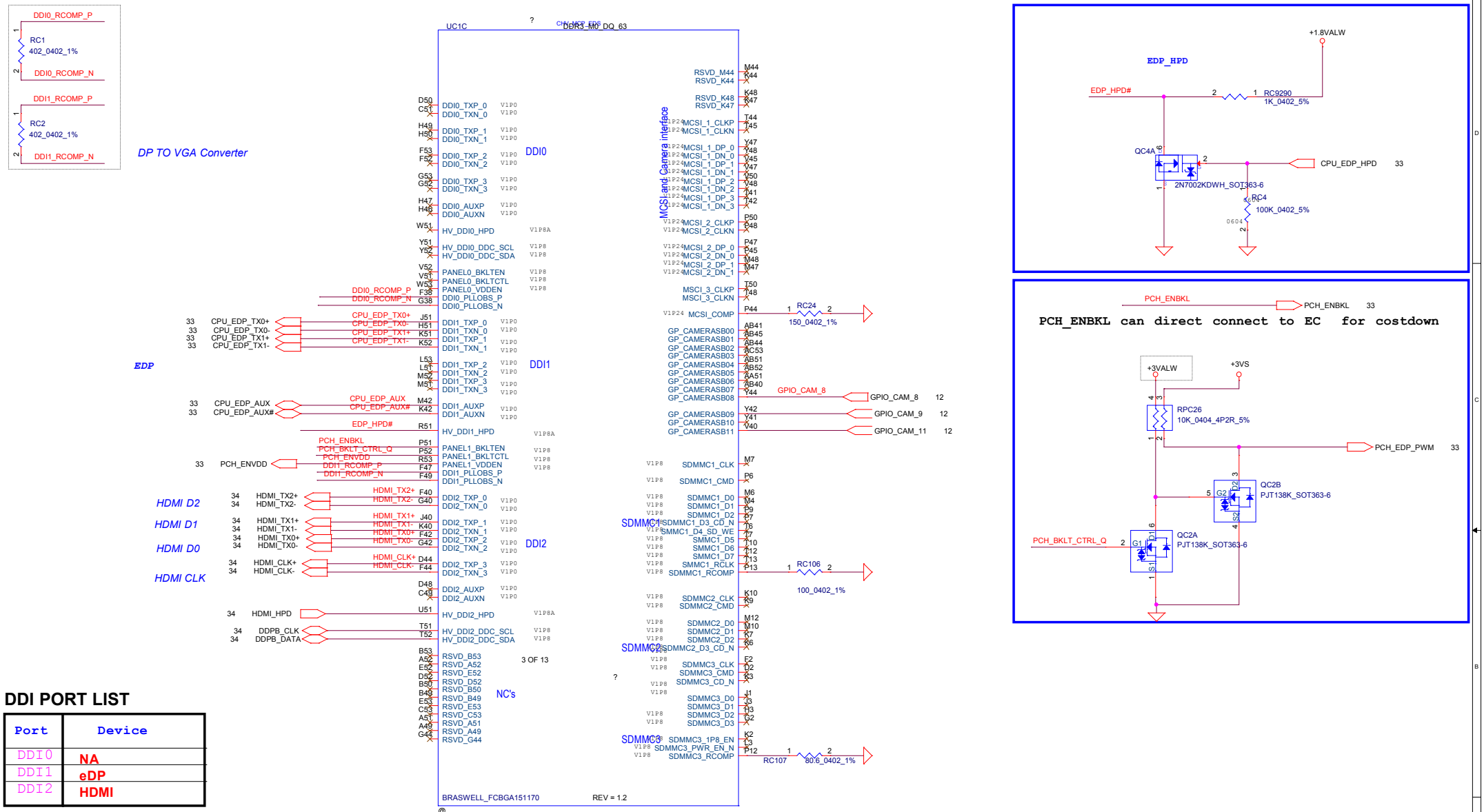

DDI PORT LIST

Port	Device
DDI0	NA
DDI1	eDP
DDI2	HDMI

Security Classification	LC Future Center Secret Data		
Issued Date	2015/10/08	Deciphered Date	2015/03/23

THIS SHEET OF ENGINEERING DRAWING IS THE PROPRIETARY PROPERTY OF LC FUTURE CENTER, AND CONTAINS CONFIDENTIAL AND TRADE SECRET INFORMATION. THIS SHEET MAY NOT BE TRANSFERED FROM THE CUSTODY OF THE COMPETENT DIVISION OF R&D DEPARTMENT EXCEPT AS AUTHORIZED BY LC FUTURE CENTER NEITHER THIS SHEET NOR THE INFORMATION IT CONTAINS MAY BE USED BY OR DISCLOSED TO ANY THIRD PARTY WITHOUT PRIOR WRITTEN CONSENT OF LC FUTURE CENTER.

Title: SOC (DDI,EDP,HDMI)

Size: Custom | Document Number: CGx20 | Rev: 1.0

Date: Tuesday, December 08, 2015 | Sheet 4 of 57

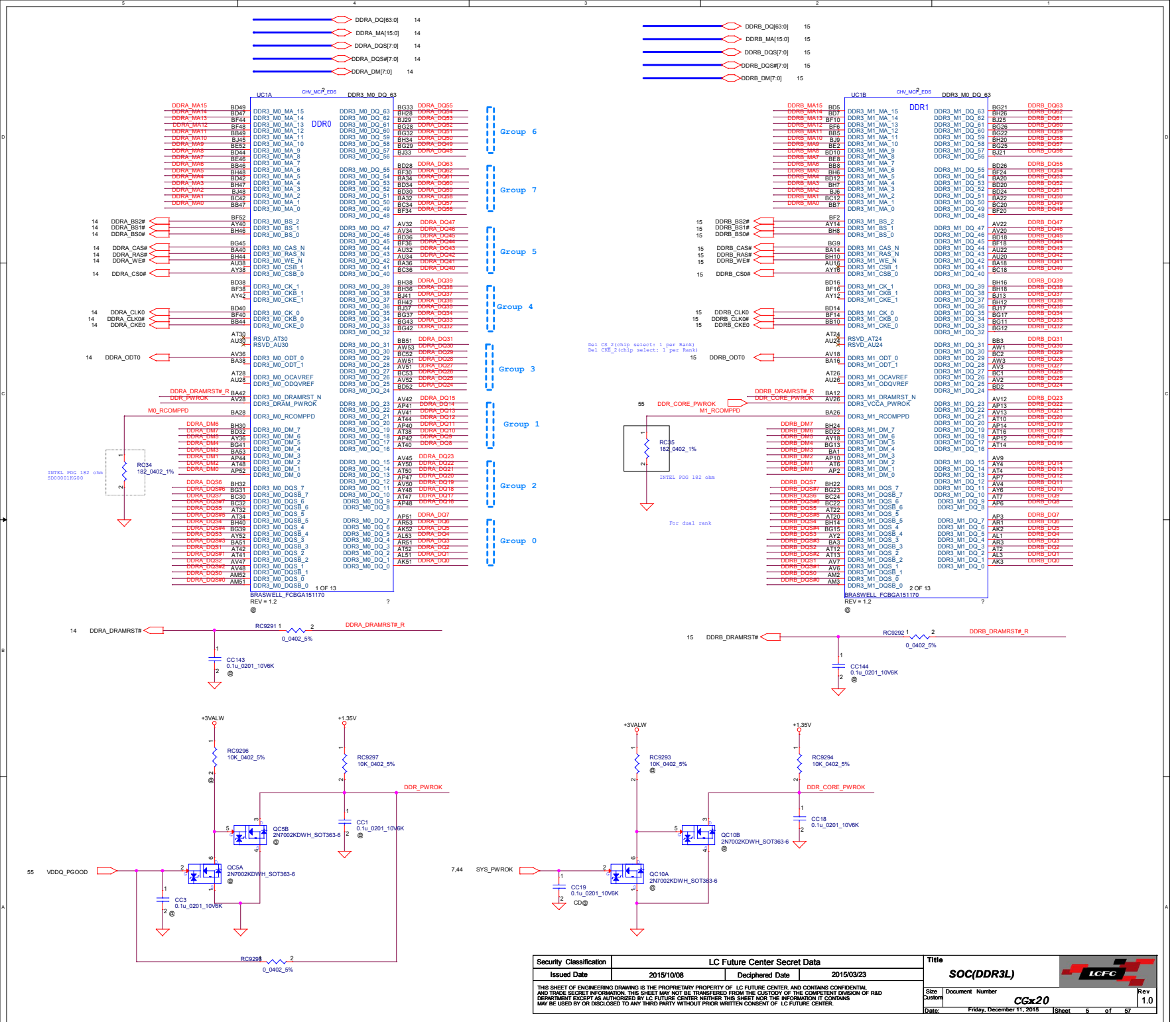

Security Classification	LC Future Center Secret Data		
Issued Date	2015/10/08	Deciphered Date	2015/03/23

THIS SHEET OF ENGINEERING DRAWING IS THE PROPRIETARY PROPERTY OF LC FUTURE CENTER. AND CONTAINS CONFIDENTIAL AND TRADE SECRET INFORMATION. THIS SHEET MAY NOT BE TRANSFERRED FROM THE CUSTODY OF THE COMPETENT DIVISION OF R&D DEPARTMENT EXCEPT AS AUTHORIZED BY LC FUTURE CENTER NEITHER THIS SHEET NOR THE INFORMATION IT CONTAINS MAY BE USED BY OR DISCLOSED TO ANY THIRD PARTY WITHOUT PRIOR WRITTEN CONSENT OF LC FUTURE CENTER.

Title: **SOC(DDR3L)**

LCFC

Size	Document Number	Rev
Custom	CGx20	1.0

Date: Friday, December 11, 2015 | Sheet 5 of 57

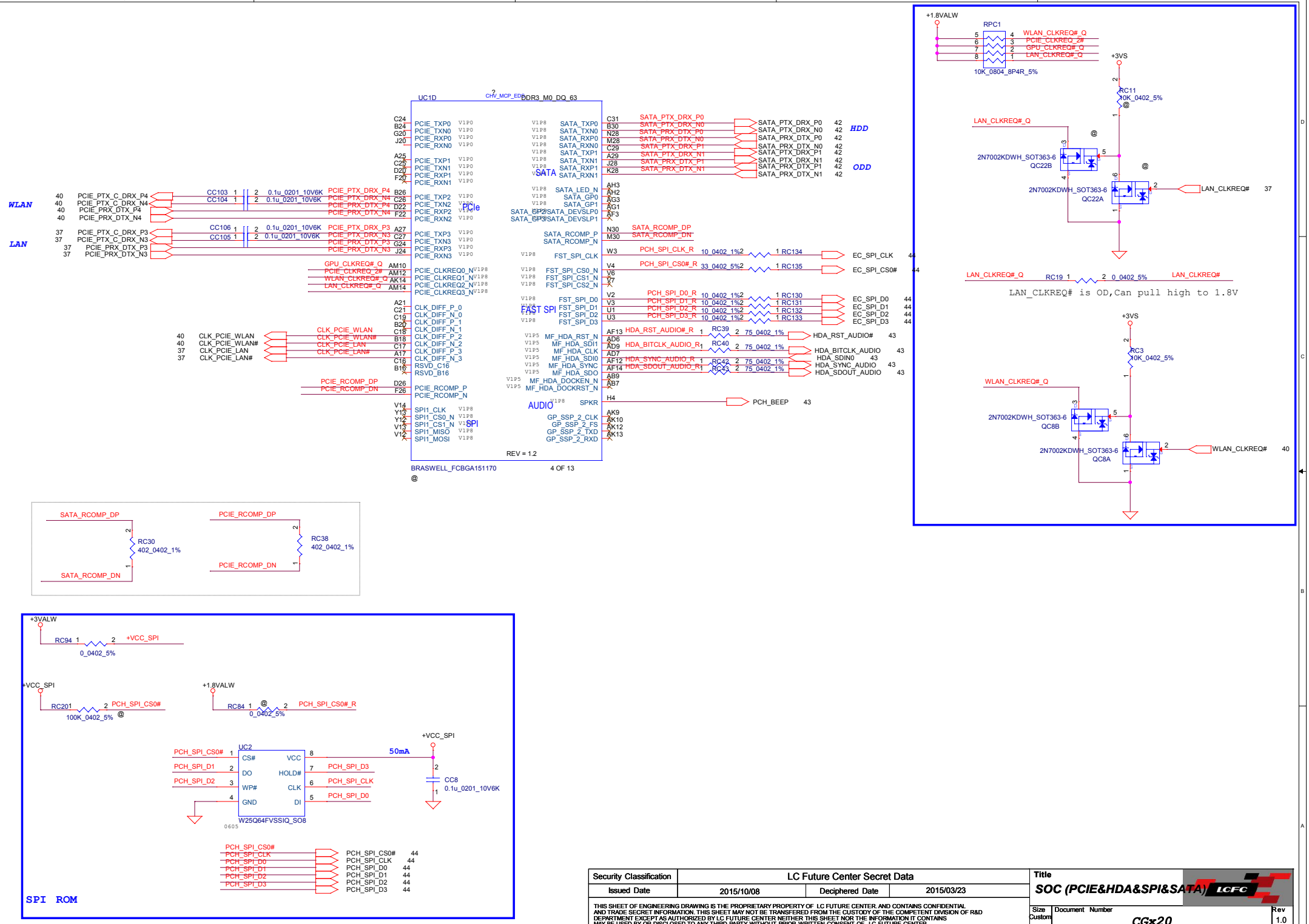

Security Classification	LC Future Center Secret Data		
Issued Date	2015/10/08	Deciphered Date	2015/03/23

THIS SHEET OF ENGINEERING DRAWING IS THE PROPRIETARY PROPERTY OF LC FUTURE CENTER. AND CONTAINS CONFIDENTIAL AND TRADE SECRET INFORMATION. THIS SHEET MAY NOT BE TRANSFERED FROM THE CUSTODY OF THE COMPETENT DIVISION OF R&D DEPARTMENT EXCEPT AS AUTHORIZED BY LC FUTURE CENTER NEITHER THIS SHEET NOR THE INFORMATION IT CONTAINS MAY BE USED BY OR DISCLOSED TO ANY THIRD PARTY WITHOUT PRIOR WRITTEN CONSENT OF LC FUTURE CENTER.

Title: SOC (PCIE&HDA&SPI&SATA)

Size: Custom | Document Number: CGx20 | Rev: 1.0

Date: Tuesday, December 08, 2015 | Sheet 6 of 57

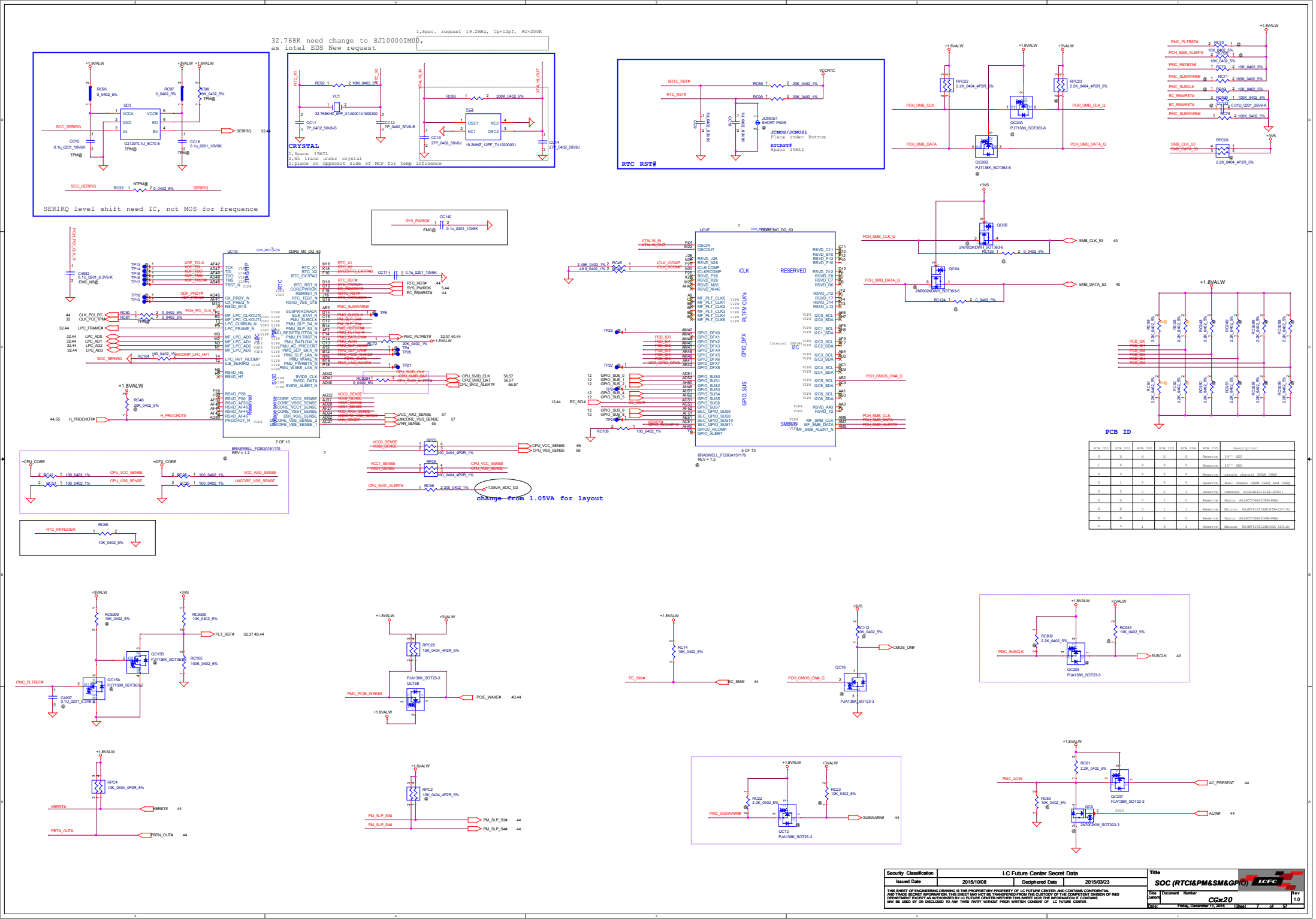

PCB_ID0	PCB_ID1	PCB_ID2	PCB_ID3	PCB_ID4	PCB_ID5	Description
0	X	X	X	X	Reserve	14'' SKU
1	X	X	X	X	Reserve	15'' SKU
X	0	X	X	X	Reserve	single channel DRAM CH#0
X	1	X	X	X	Reserve	dual chanel DRAM CH#0 and CH#1
X	X	0	0	1	Reserve	Samsung 4G(K4B4G1646E-BYK0)
X	X	0	1	0	Reserve	Hynix 4G(H5TC4G63CFR-PBA)
X	X	0	1	1	Reserve	Micron 4G(MT41K256M16TW-107:P)
X	X	1	0	0	Reserve	Hynix 8G(H5TC8G63CMR-PBA)
X	X	1	0	1	Reserve	Micron 8G(MT41K512M16HA-125:A)

Security Classification	LC Future Center Secret Data		
Issued Date	2015/10/08	Deciphered Date	2015/03/23

THIS SHEET OF ENGINEERING DRAWING IS THE PROPRIETARY PROPERTY OF LC FUTURE CENTER, AND CONTAINS CONFIDENTIAL AND TRADE SECRET INFORMATION. THIS SHEET MAY NOT BE TRANSFERED FROM THE CUSTODY OF THE COMPETENT DIVISION OF R&D DEPARTMENT EXCEPT AS AUTHORIZED BY LC FUTURE CENTER NEITHER THIS SHEET NOR THE INFORMATION IT CONTAINS MAY BE USED BY OR DISCLOSED TO ANY THIRD PARTY WITHOUT PRIOR WRITTEN CONSENT OF LC FUTURE CENTER

Title: SOC (RTC/PM&SM&GPIO)

Size: CGx20 | Document Number | Rev 1.0

Date: Friday, December 11, 2015 | Sheet 7 of 67

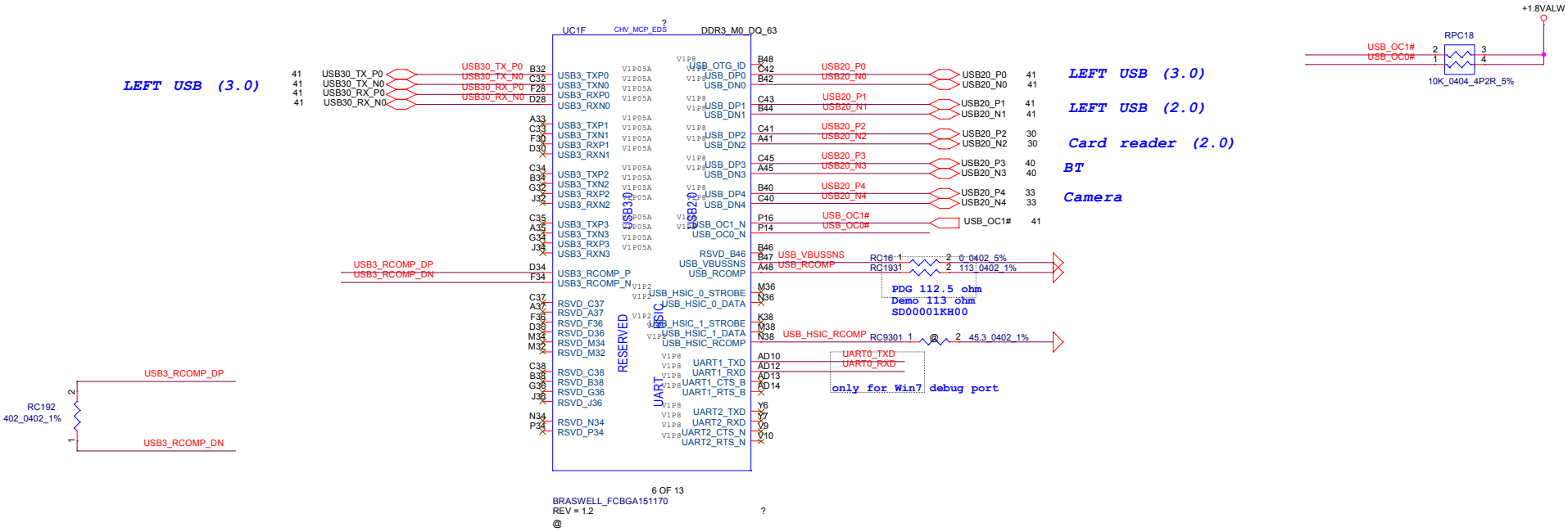

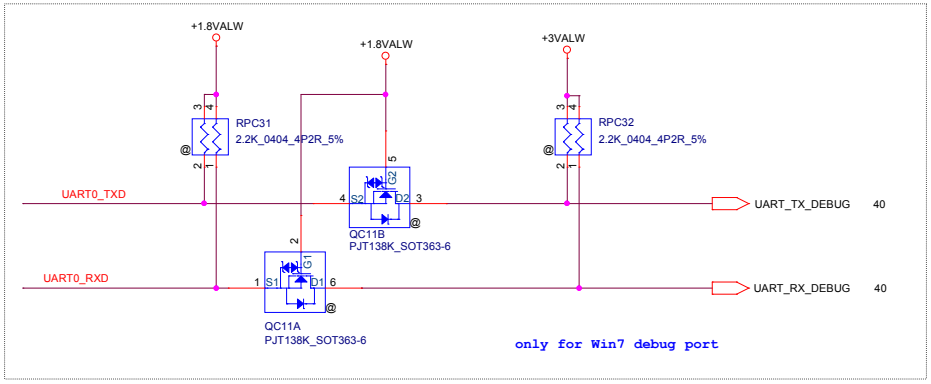

Security Classification	LC Future Center Secret Data		
Issued Date	2015/10/08	Deciphered Date	2015/03/23

THIS SHEET OF ENGINEERING DRAWING IS THE PROPRIETARY PROPERTY OF LC FUTURE CENTER. AND CONTAINS CONFIDENTIAL AND TRADE SECRET INFORMATION. THIS SHEET MAY NOT BE TRANSFERED FROM THE CUSTODY OF THE COMPETENT DIVISION OF R&D DEPARTMENT EXCEPT AS AUTHORIZED BY LC FUTURE CENTER NEITHER THIS SHEET NOR THE INFORMATION IT CONTAINS MAY BE USED BY OR DISCLOSED TO ANY THIRD PARTY WITHOUT PRIOR WRITTEN CONSENT OF LC FUTURE CENTER.

Title: **SOC (USB)**

Size: Custom | Document Number: **CGx20** | Rev: 1.0

Date: Tuesday, December 08, 2015 | Sheet 8 of 57

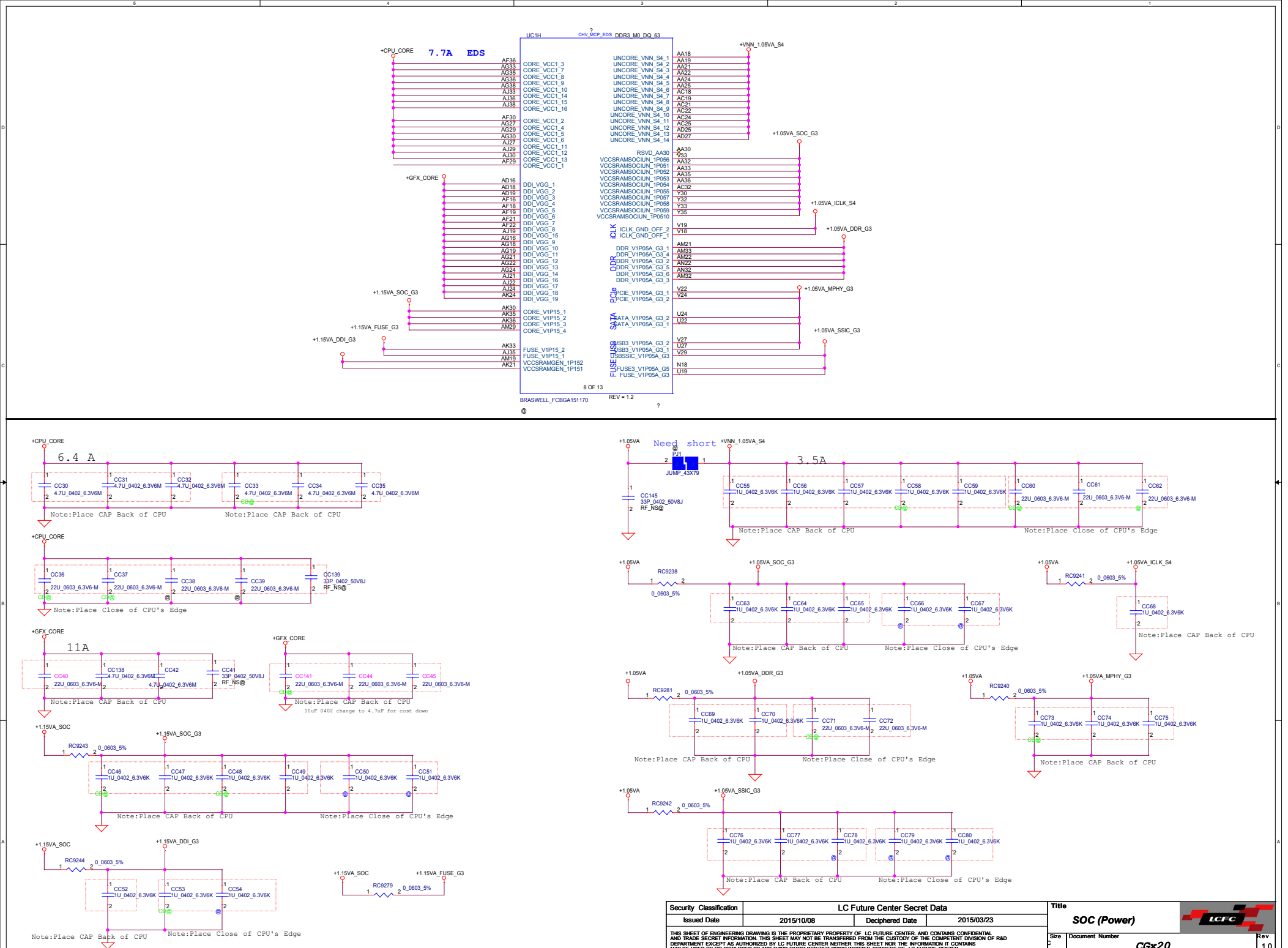

Security Classification	LC Future Center Secret Data		
Issued Date	2015/10/08	Deciphered Date	2015/03/23

THIS SHEET OF ENGINEERING DRAWING IS THE PROPRIETARY PROPERTY OF LC FUTURE CENTER, AND CONTAINS CONFIDENTIAL AND TRADE SECRET INFORMATION. THIS SHEET MAY NOT BE TRANSFERED FROM THE CUSTODY OF THE COMPETENT DIVISION OF R&D DEPARTMENT EXCEPT AS AUTHORIZED BY LC FUTURE CENTER NEITHER THIS SHEET NOR THE INFORMATION IT CONTAINS MAY BE USED BY OR DISCLOSED TO ANY THIRD PARTY WITHOUT PRIOR WRITTEN CONSENT OF LC FUTURE CENTER.

Title: **SOC (Power)**

Size	Document Number	Rev
C	CGx20	1.0

Date: Tuesday, December 08, 2015 Sheet 9 of 57

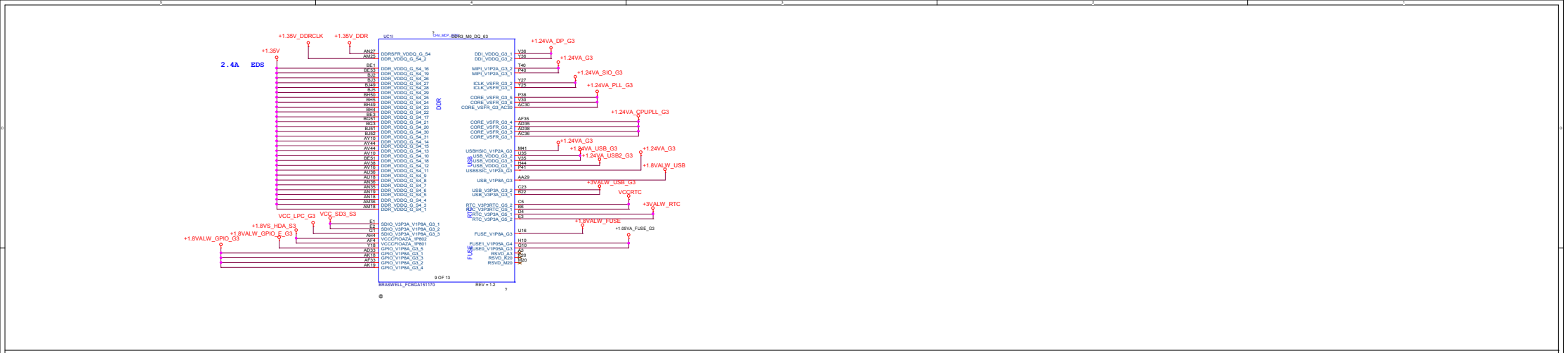

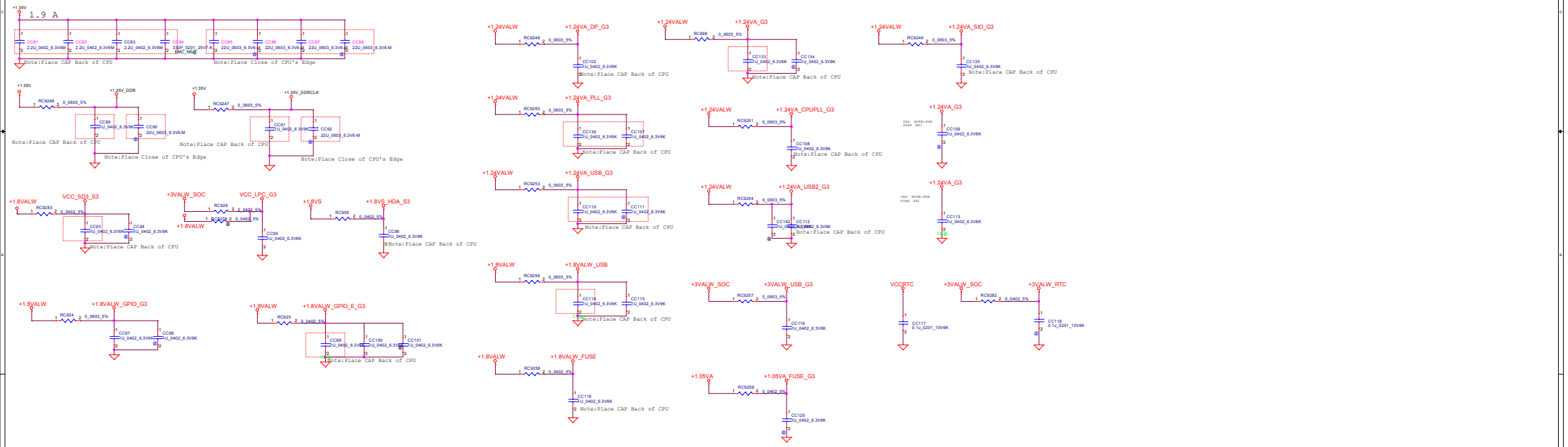

Security Classification	LC Future Center Secret Data		Title
Issued Date	2015/10/08	Deciphered Date 2015/03/23	SOC (Power2)

THIS SHEET OF ENGINEERING DRAWING IS THE PROPRIETARY PROPERTY OF LC FUTURE CENTER, AND CONTAINS CONFIDENTIAL AND TRADE SECRET INFORMATION. THIS SHEET MAY NOT BE TRANSFERRED FROM THE CUSTODY OF THE COMPETENT DIVISION OF R&D DEPARTMENT EXCEPT AS AUTHORIZED BY LC FUTURE CENTER NEITHER THIS SHEET NOR THE INFORMATION IT CONTAINS MAY BE USED BY OR DISCLOSED TO ANY THIRD PARTY WITHOUT PRIOR WRITTEN CONSENT OF LC FUTURE CENTER.

Size	Document Number	Rev
2	CGx20	1.0

Date: Tuesday, December 08, 2015 Sheet 10 of 57

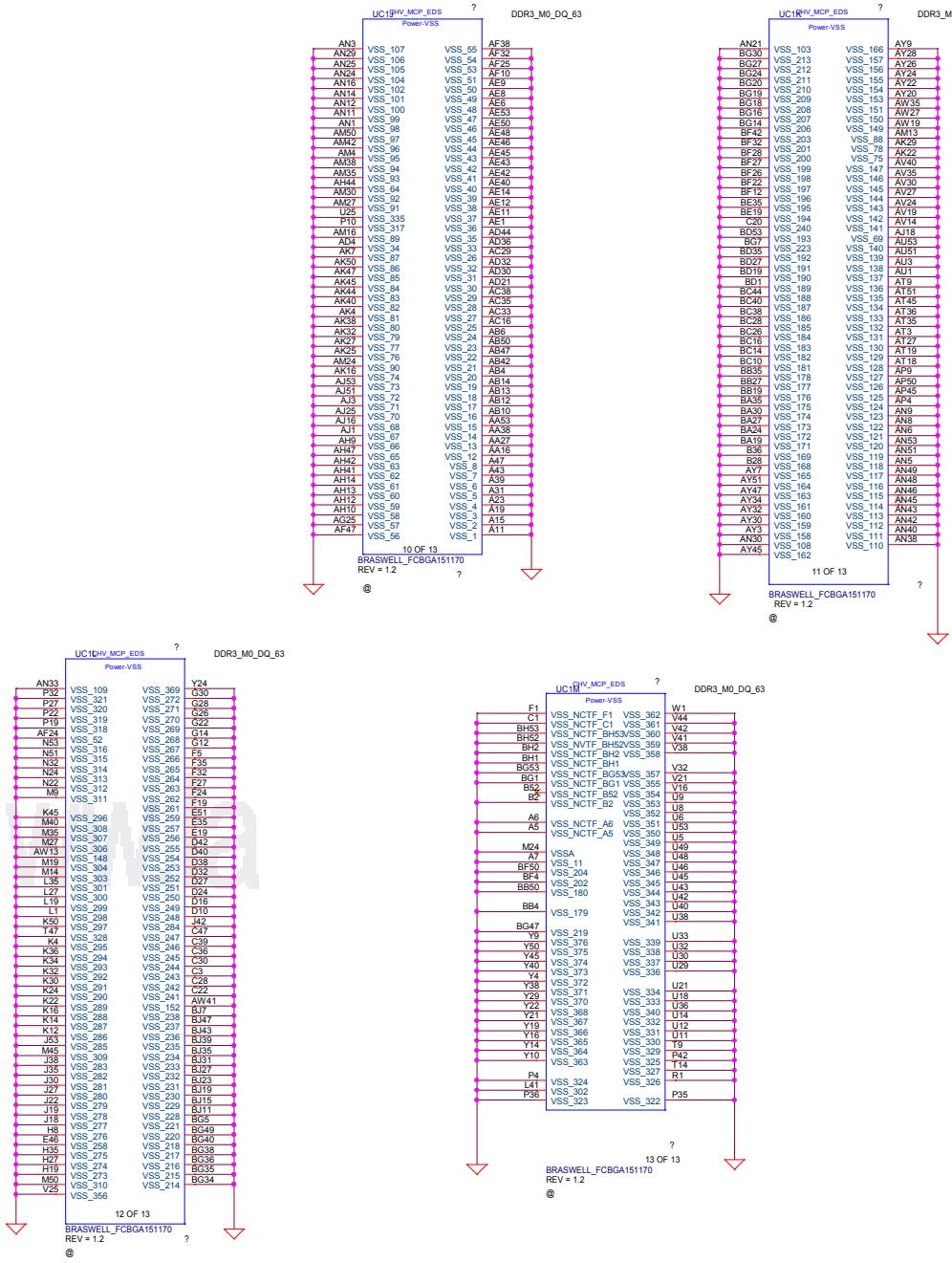

Security Classification	LC Future Center Secret Data		
Issued Date	2015/10/08	Deciphered Date	2015/03/23

THIS SHEET OF ENGINEERING DRAWING IS THE PROPRIETARY PROPERTY OF LC FUTURE CENTER, AND CONTAINS CONFIDENTIAL AND TRADE SECRET INFORMATION. THIS SHEET MAY NOT BE TRANSFERED FROM THE CUSTODY OF THE COMPETENT DIVISION OF R&D DEPARTMENT EXCEPT AS AUTHORIZED BY LC FUTURE CENTER NEITHER THIS SHEET NOR THE INFORMATION IT CONTAINS MAY BE USED BY OR DISCLOSED TO ANY THIRD PARTY WITHOUT PRIOR WRITTEN CONSENT OF LC FUTURE CENTER.

Title: **SOC (VSS)**

Size: C | Document Number: CGx20 | Rev: 1.0

Date: Tuesday, December 08, 2015 | Sheet 11 of 57

Hardware STRAPS
(Follow up CRB)

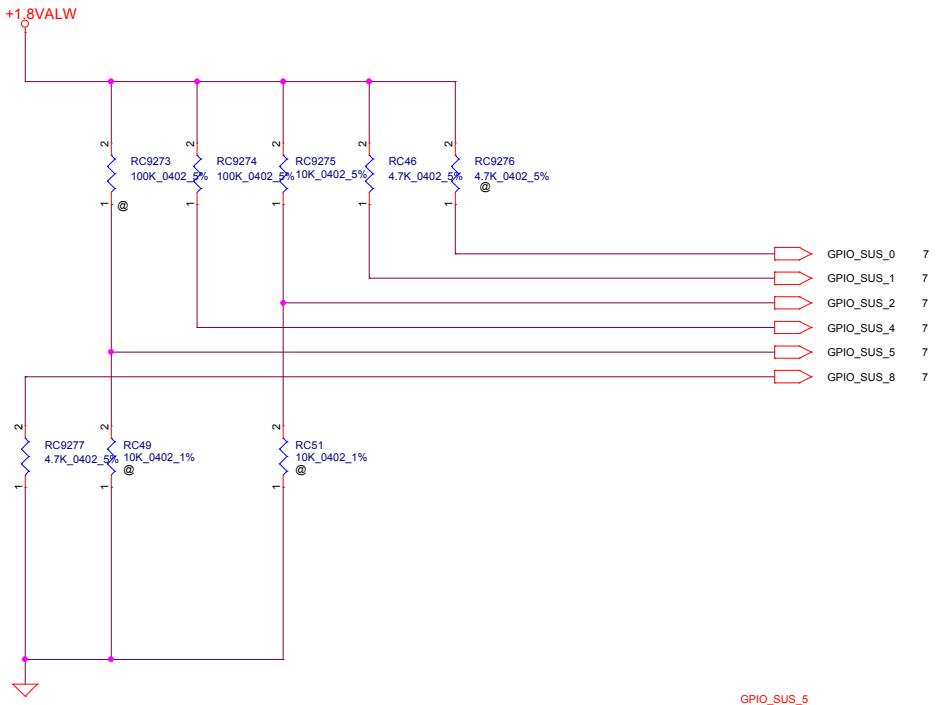

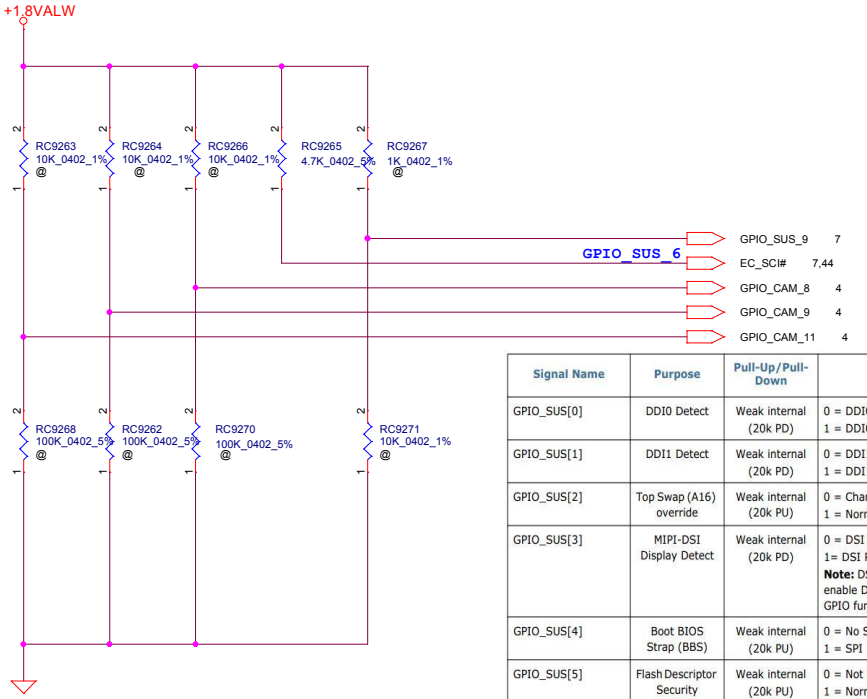

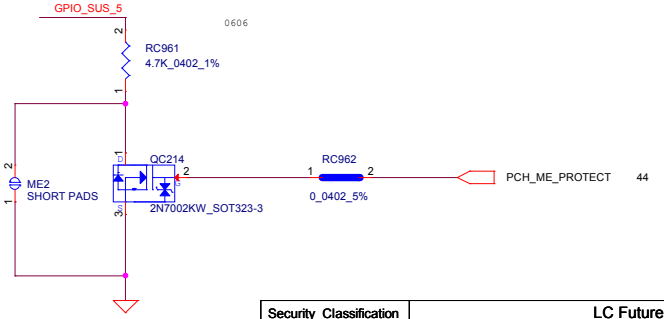

Signal Name	Purpose	Pull-Up/Pull-Down	Strap Description
GPIO_SUS[0]	DDI0 Detect	Weak internal (20k PD)	0 = DDI0 not detected 1 = DDI0 detected
GPIO_SUS[1]	DDI1 Detect	Weak internal (20k PD)	0 = DDI1 not detected 1 = DDI1 detected
GPIO_SUS[2]	Top Swap (A16) override	Weak internal (20k PU)	0 = Change Boot Loader address 1 = Normal Operation
GPIO_SUS[3]	MIPI-DSI Display Detect	Weak internal (20k PD)	0 = DSI Port not detected 1= DSI Port detected **Note:** DSI is not POR for BSW. This strap will not enable DSI on BSW. Leave the pin floating if GPIO functionality is not used.
GPIO_SUS[4]	Boot BIOS Strap (BBS)	Weak internal (20k PU)	0 = No SPI (Default) 1 = SPI
GPIO_SUS[5]	Flash Descriptor Security Override	Weak internal (20k PU)	0 = Not supported 1 = Normal Operation
GPIO_SUS[6]	Halt Boot Strap	Weak internal (20k PU)	1= Normal Operation **Note:** This strap **MUST** be High at RSMRST_N de-assert to ensure proper platform operation and use of GPIO_DFX[8:0]
GPIO_SUS[8]	PLLs, ICLK, USB2, DDI SFR Supply Select	Weak internal (20k PU)	0 = Supply is 1.25V 1 = Supply is 1.35V
GPIO_SUS[9]	ICLK, USB2, DDI SFR Bypass	Weak internal (20k PD)	0 = No bypass 1 = Bypass with 1.05V
GPIO_CAMERASB08	ICLK Xtal OSC Bypass	Weak internal (20k PD)	0 = No Bypass (Default) 1 = Bypass
GPIO_CAMERASB09	CCU SUS RO Bypass	Weak internal (20k PD)	0 = No Bypass (Default) 1 = Bypass
GPIO_CAMERASB11	RTC OSC Bypass	Weak internal (20k PD)	0 = No Bypass (Default) 1 = Bypass

Security Classification	LC Future Center Secret Data		
Issued Date	2015/10/08	Deciphered Date	2015/03/23

THIS SHEET OF ENGINEERING DRAWING IS THE PROPRIETARY PROPERTY OF LC FUTURE CENTER. AND CONTAINS CONFIDENTIAL AND TRADE SECRET INFORMATION. THIS SHEET MAY NOT BE TRANSFERED FROM THE CUSTODY OF THE COMPETENT DIVISION OF R&D DEPARTMENT EXCEPT AS AUTHORIZED BY LC FUTURE CENTER NEITHER THIS SHEET NOR THE INFORMATION IT CONTAINS MAY BE USED BY OR DISCLOSED TO ANY THIRD PARTY WITHOUT PRIOR WRITTEN CONSENT OF LC FUTURE CENTER.

Title: **SOC (STRAPS & OTHERS)**

LCFC

Size	Document Number	Rev
Custom	CGx20	1.0

Date: Tuesday, December 08, 2015 | Sheet 12 of 57

Security Classification	LC Future Center Secret Data		
Issued Date	2015/10/08	Deciphered Date	2015/03/23

THIS SHEET OF ENGINEERING DRAWING IS THE PROPRIETARY PROPERTY OF LC FUTURE CENTER, AND CONTAINS CONFIDENTIAL AND TRADE SECRET INFORMATION. THIS SHEET MAY NOT BE TRANSFERED FROM THE CUSTODY OF THE COMPETENT DIVISION OF R&D DEPARTMENT EXCEPT AS AUTHORIZED BY LC FUTURE CENTER NEITHER THIS SHEET NOR THE INFORMATION IT CONTAINS MAY BE USED BY OR DISCLOSED TO ANY THIRD PARTY WITHOUT PRIOR WRITTEN CONSENT OF LC FUTURE CENTER.

Title

MCP (OTHER)

Size	Document Number	Rev
Custom	CGx20	1.0

Date: Tuesday, December 08, 2015 | Sheet 13 of 57

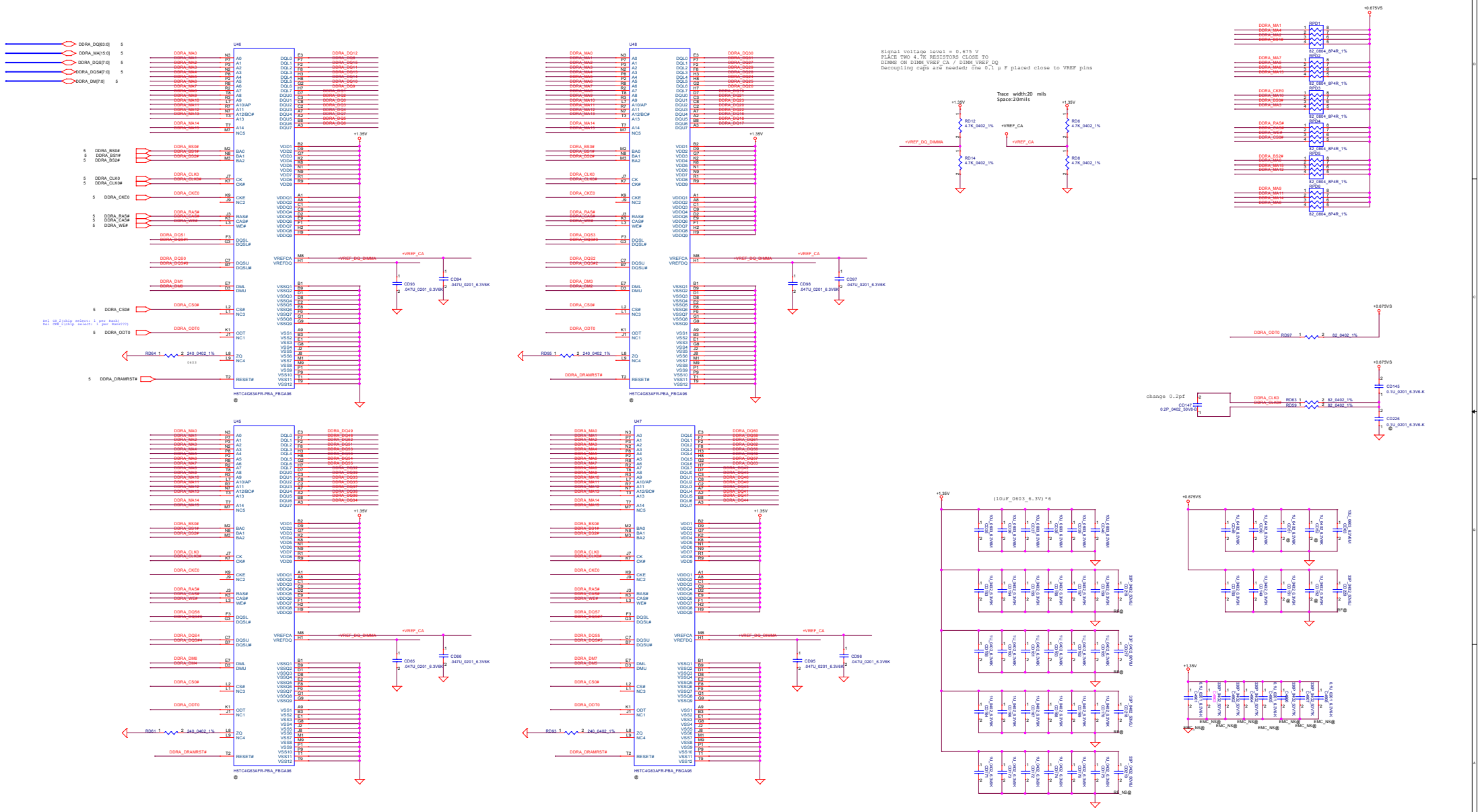

Security Classification	LC Future Center Secret Data		
Issued Date	2015/10/08	Deciphered Date	2015/03/23

THIS SHEET OF ENGINEERING DRAWING IS THE PROPRIETARY PROPERTY OF LC FUTURE CENTER, AND CONTAINS CONFIDENTIAL AND TRADE SECRET INFORMATION. THIS SHEET MAY NOT BE TRANSFERRED FROM THE CUSTODY OF THE COMPETENT DIVISION OF R&D DEPARTMENT EXCEPT AS AUTHORIZED BY LC FUTURE CENTER. NEITHER THIS SHEET NOR THE INFORMATION IT CONTAINS MAY BE USED BY OR DISCLOSED TO ANY THIRD PARTY WITHOUT PRIOR WRITTEN CONSENT OF LC FUTURE CENTER.

Title: **DDRIII SO-DIMM A**

Size: D | Document Number: CGx20 | Rev: 1.0

Date: Tuesday, December 08, 2015 | Sheet 14 of 57

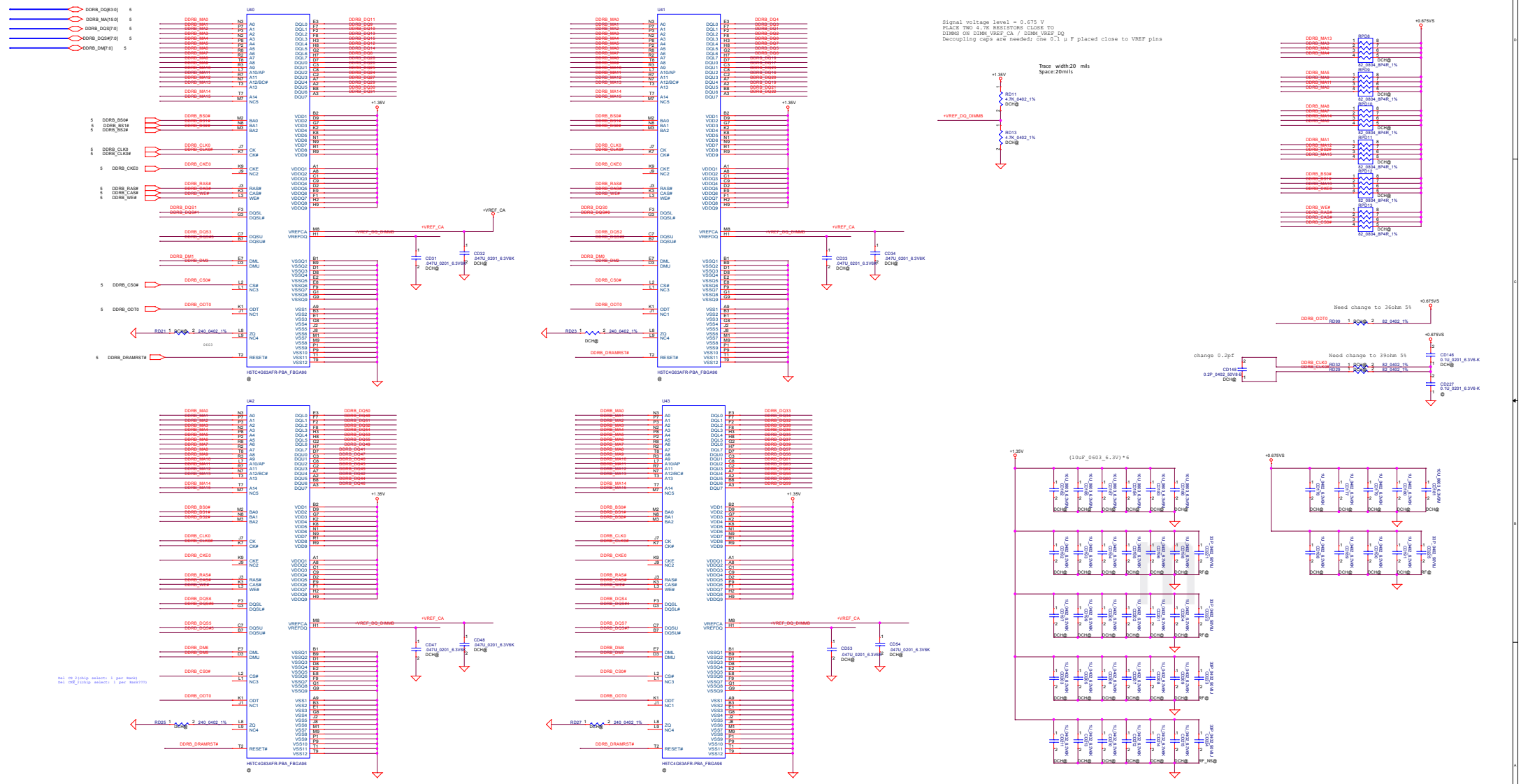

Security Classification	LC Future Center Secret Data		
Issued Date	2015/10/08	Deciphered Date	2015/03/23

THIS SHEET OF ENGINEERING DRAWING IS THE PROPRIETARY PROPERTY OF LC FUTURE CENTER, AND CONTAINS CONFIDENTIAL AND TRADE SECRET INFORMATION. THIS SHEET MAY NOT BE TRANSFERED FROM THE CUSTODY OF THE COMPETENT DIVISION OF R&D DEPARTMENT EXCEPT AS AUTHORIZED BY LC FUTURE CENTER NEITHER THIS SHEET NOR THE INFORMATION IT CONTAINS MAY BE USED BY OR DISCLOSED TO ANY THIRD PARTY WITHOUT PRIOR WRITTEN CONSENT OF LC FUTURE CENTER.

Title: **DDRIII SO-DIMM B**

Size	Document Number	
D	CGx20	1.0

Date: Tuesday, December 08, 2015 Sheet 15 of 57

Security Classification	LC Future Center Secret Data		
Issued Date	2015/10/08	Deciphered Date	2015/03/23

THIS SHEET OF ENGINEERING DRAWING IS THE PROPRIETARY PROPERTY OF LC FUTURE CENTER. AND CONTAINS CONFIDENTIAL AND TRADE SECRET INFORMATION. THIS SHEET MAY NOT BE TRANSFERED FROM THE CUSTODY OF THE COMPETENT DIVISION OF R&D DEPARTMENT EXCEPT AS AUTHORIZED BY LC FUTURE CENTER NEITHER THIS SHEET NOR THE INFORMATION IT CONTAINS MAY BE USED BY OR DISCLOSED TO ANY THIRD PARTY WITHOUT PRIOR WRITTEN CONSENT OF LC FUTURE CENTER.

Title

USB Hub GL850G-OHY31

Size B	Document Number CGx20	Rev 1.0
Date: Tuesday, December 08, 2015	Sheet 16 of 57	

Security Classification	LC Future Center Secret Data		
Issued Date	2015/10/08	Deciphered Date	2015/03/23

THIS SHEET OF ENGINEERING DRAWING IS THE PROPRIETARY PROPERTY OF LC FUTURE CENTER. AND CONTAINS CONFIDENTIAL AND TRADE SECRET INFORMATION. THIS SHEET MAY NOT BE TRANSFERED FROM THE CUSTODY OF THE COMPETENT DIVISION OF R&D DEPARTMENT EXCEPT AS AUTHORIZED BY LC FUTURE CENTER NEITHER THIS SHEET NOR THE INFORMATION IT CONTAINS MAY BE USED BY OR DISCLOSED TO ANY THIRD PARTY WITHOUT PRIOR WRITTEN CONSENT OF LC FUTURE CENTER.

Title

Blank

Size	Document Number	Rev
Custom	CGx20	1.0

Date: Tuesday, December 08, 2015 | Sheet 17 of 57

Security Classification	LC Future Center Secret Data		
Issued Date	2015/10/08	Deciphered Date	2015/03/23

THIS SHEET OF ENGINEERING DRAWING IS THE PROPRIETARY PROPERTY OF LC FUTURE CENTER, AND CONTAINS CONFIDENTIAL AND TRADE SECRET INFORMATION. THIS SHEET MAY NOT BE TRANSFERED FROM THE CUSTODY OF THE COMPETENT DIVISION OF R&D DEPARTMENT EXCEPT AS AUTHORIZED BY LC FUTURE CENTER NEITHER THIS SHEET NOR THE INFORMATION IT CONTAINS MAY BE USED BY OR DISCLOSED TO ANY THIRD PARTY WITHOUT PRIOR WRITTEN CONSENT OF LC FUTURE CENTER.

Title

VGA Notes List

Size	Document Number	Rev
C	CGx20	1.0

Date: Tuesday, December 08, 2015 Sheet 18 of 57

Security Classification	LC Future Center Secret Data		
Issued Date	2015/10/08	Deciphered Date	2015/03/23

THIS SHEET OF ENGINEERING DRAWING IS THE PROPRIETARY PROPERTY OF LC FUTURE CENTER, AND CONTAINS CONFIDENTIAL AND TRADE SECRET INFORMATION. THIS SHEET MAY NOT BE TRANSFERED FROM THE CUSTODY OF THE COMPETENT DIVISION OF R&D DEPARTMENT EXCEPT AS AUTHORIZED BY LC FUTURE CENTER NEITHER THIS SHEET NOR THE INFORMATION IT CONTAINS MAY BE USED BY OR DISCLOSED TO ANY THIRD PARTY WITHOUT PRIOR WRITTEN CONSENT OF LC FUTURE CENTER.

Title

N16X_PCIE/ DAC/ GPIO

Size	Document Number	Rev
Custom	CGx20	1.0

Date: Tuesday, December 08, 2015 | Sheet 19 of 57

Security Classification	LC Future Center Secret Data		
Issued Date	2015/10/08	Deciphered Date	2015/03/23

THIS SHEET OF ENGINEERING DRAWING IS THE PROPRIETARY PROPERTY OF LC FUTURE CENTER, AND CONTAINS CONFIDENTIAL AND TRADE SECRET INFORMATION. THIS SHEET MAY NOT BE TRANSFERED FROM THE CUSTODY OF THE COMPETENT DIVISION OF R&D DEPARTMENT EXCEPT AS AUTHORIZED BY LC FUTURE CENTER NEITHER THIS SHEET NOR THE INFORMATION IT CONTAINS MAY BE USED BY OR DISCLOSED TO ANY THIRD PARTY WITHOUT PRIOR WRITTEN CONSENT OF LC FUTURE CENTER.

Title

N16X_LVDS/ HDMI/ THERM

Size	Document Number	Rev
C	CGx20	1.0

Date: Tuesday, December 08, 2015 Sheet 20 of 57

Security Classification	LC Future Center Secret Data		
Issued Date	2015/10/08	Deciphered Date	2015/03/23

THIS SHEET OF ENGINEERING DRAWING IS THE PROPRIETARY PROPERTY OF LC FUTURE CENTER, AND CONTAINS CONFIDENTIAL AND TRADE SECRET INFORMATION. THIS SHEET MAY NOT BE TRANSFERED FROM THE CUSTODY OF THE COMPETENT DIVISION OF R&D DEPARTMENT EXCEPT AS AUTHORIZED BY LC FUTURE CENTER NEITHER THIS SHEET NOR THE INFORMATION IT CONTAINS MAY BE USED BY OR DISCLOSED TO ANY THIRD PARTY WITHOUT PRIOR WRITTEN CONSENT OF LC FUTURE CENTER.

Title

N16X_Power

Size	Document Number	Rev
C	*CGx20*	1.0

Date: Tuesday, December 08, 2015 Sheet 21 of 57

Security Classification	LC Future Center Secret Data		
Issued Date	2015/10/08	Deciphered Date	2015/03/23

THIS SHEET OF ENGINEERING DRAWING IS THE PROPRIETARY PROPERTY OF LC FUTURE CENTER, AND CONTAINS CONFIDENTIAL AND TRADE SECRET INFORMATION. THIS SHEET MAY NOT BE TRANSFERED FROM THE CUSTODY OF THE COMPETENT DIVISION OF R&D DEPARTMENT EXCEPT AS AUTHORIZED BY LC FUTURE CENTER NEITHER THIS SHEET NOR THE INFORMATION IT CONTAINS MAY BE USED BY OR DISCLOSED TO ANY THIRD PARTY WITHOUT PRIOR WRITTEN CONSENT OF LC FUTURE CENTER.

Title

N16X_+VGA CORE, GND

Size	Document Number	Rev
C	CGx20	1.0

Date: Tuesday, December 08, 2015 Sheet 22 of 57

Security Classification	LC Future Center Secret Data		
Issued Date	2015/10/08	Deciphered Date	2015/03/23

THIS SHEET OF ENGINEERING DRAWING IS THE PROPRIETARY PROPERTY OF LC FUTURE CENTER, AND CONTAINS CONFIDENTIAL AND TRADE SECRET INFORMATION. THIS SHEET MAY NOT BE TRANSFERED FROM THE CUSTODY OF THE COMPETENT DIVISION OF R&D DEPARTMENT EXCEPT AS AUTHORIZED BY LC FUTURE CENTER NEITHER THIS SHEET NOR THE INFORMATION IT CONTAINS MAY BE USED BY OR DISCLOSED TO ANY THIRD PARTY WITHOUT PRIOR WRITTEN CONSENT OF LC FUTURE CENTER.

Title

N16X_MEM Interface

Size	Document Number	Rev
C	CGx20	1.0

Date: Tuesday, December 08, 2015 Sheet 23 of 57

Security Classification	LC Future Center Secret Data		
Issued Date	2015/10/08	Deciphered Date	2015/03/23

THIS SHEET OF ENGINEERING DRAWING IS THE PROPRIETARY PROPERTY OF LC FUTURE CENTER, AND CONTAINS CONFIDENTIAL AND TRADE SECRET INFORMATION. THIS SHEET MAY NOT BE TRANSFERED FROM THE CUSTODY OF THE COMPETENT DIVISION OF R&D DEPARTMENT EXCEPT AS AUTHORIZED BY LC FUTURE CENTER NEITHER THIS SHEET NOR THE INFORMATION IT CONTAINS MAY BE USED BY OR DISCLOSED TO ANY THIRD PARTY WITHOUT PRIOR WRITTEN CONSENT OF LC FUTURE CENTER.

Title

DDR3 VRAM Rank0_L

Size	Document Number	Rev
C	CGx20	1.0

Date: Tuesday, December 08, 2015 Sheet 24 of 57

Security Classification	LC Future Center Secret Data		
Issued Date	2015/10/08	Deciphered Date	2015/03/23

THIS SHEET OF ENGINEERING DRAWING IS THE PROPRIETARY PROPERTY OF LC FUTURE CENTER, AND CONTAINS CONFIDENTIAL AND TRADE SECRET INFORMATION. THIS SHEET MAY NOT BE TRANSFERED FROM THE CUSTODY OF THE COMPETENT DIVISION OF R&D DEPARTMENT EXCEPT AS AUTHORIZED BY LC FUTURE CENTER NEITHER THIS SHEET NOR THE INFORMATION IT CONTAINS MAY BE USED BY OR DISCLOSED TO ANY THIRD PARTY WITHOUT PRIOR WRITTEN CONSENT OF LC FUTURE CENTER.

Title

DDR3 VRAM Rank0_H

Size	Document Number	Rev
C	CGx20	1.0

Date: Tuesday, December 08, 2015 Sheet 25 of 57

Security Classification	LC Future Center Secret Data		
Issued Date	2015/10/08	Deciphered Date	2015/03/23

THIS SHEET OF ENGINEERING DRAWING IS THE PROPRIETARY PROPERTY OF LC FUTURE CENTER, AND CONTAINS CONFIDENTIAL AND TRADE SECRET INFORMATION. THIS SHEET MAY NOT BE TRANSFERED FROM THE CUSTODY OF THE COMPETENT DIVISION OF R&D DEPARTMENT EXCEPT AS AUTHORIZED BY LC FUTURE CENTER NEITHER THIS SHEET NOR THE INFORMATION IT CONTAINS MAY BE USED BY OR DISCLOSED TO ANY THIRD PARTY WITHOUT PRIOR WRITTEN CONSENT OF LC FUTURE CENTER.

Title

DDR3 VRAM Rank1_L

LCFC

Size	Document Number	Rev
C	CGx20	1.0

Date: Tuesday, December 08, 2015 Sheet 26 of 57

Security Classification	LC Future Center Secret Data		
Issued Date	2015/10/08	Deciphered Date	2015/03/23

THIS SHEET OF ENGINEERING DRAWING IS THE PROPRIETARY PROPERTY OF LC FUTURE CENTER, AND CONTAINS CONFIDENTIAL AND TRADE SECRET INFORMATION. THIS SHEET MAY NOT BE TRANSFERED FROM THE CUSTODY OF THE COMPETENT DIVISION OF R&D DEPARTMENT EXCEPT AS AUTHORIZED BY LC FUTURE CENTER NEITHER THIS SHEET NOR THE INFORMATION IT CONTAINS MAY BE USED BY OR DISCLOSED TO ANY THIRD PARTY WITHOUT PRIOR WRITTEN CONSENT OF LC FUTURE CENTER.

Title

DDR3 VRAM Rank1_H

Size	Document Number	Rev
C	CGx20	1.0

Date: Tuesday, December 08, 2015 Sheet 27 of 57

Security Classification	LC Future Center Secret Data		
Issued Date	2015/10/08	Deciphered Date	2015/03/23

THIS SHEET OF ENGINEERING DRAWING IS THE PROPRIETARY PROPERTY OF LC FUTURE CENTER, AND CONTAINS CONFIDENTIAL AND TRADE SECRET INFORMATION. THIS SHEET MAY NOT BE TRANSFERED FROM THE CUSTODY OF THE COMPETENT DIVISION OF R&D DEPARTMENT EXCEPT AS AUTHORIZED BY LC FUTURE CENTER NEITHER THIS SHEET NOR THE INFORMATION IT CONTAINS MAY BE USED BY OR DISCLOSED TO ANY THIRD PARTY WITHOUT PRIOR WRITTEN CONSENT OF LC FUTURE CENTER.

Title

N16X_MISC

Size	Document Number	Rev
C	CGx20	1.0

Date: Tuesday, December 08, 2015 Sheet 28 of 57

Security Classification	LC Future Center Secret Data		
Issued Date	2015/10/08	Deciphered Date	2015/03/23

THIS SHEET OF ENGINEERING DRAWING IS THE PROPRIETARY PROPERTY OF LC FUTURE CENTER, AND CONTAINS CONFIDENTIAL AND TRADE SECRET INFORMATION. THIS SHEET MAY NOT BE TRANSFERED FROM THE CUSTODY OF THE COMPETENT DIVISION OF R&D DEPARTMENT EXCEPT AS AUTHORIZED BY LC FUTURE CENTER NEITHER THIS SHEET NOR THE INFORMATION IT CONTAINS MAY BE USED BY OR DISCLOSED TO ANY THIRD PARTY WITHOUT PRIOR WRITTEN CONSENT OF LC FUTURE CENTER.

Title

Blank

Size	Document Number	Rev
Custom	CGx20	1.0

Date: Tuesday, December 08, 2015 Sheet 29 of 57

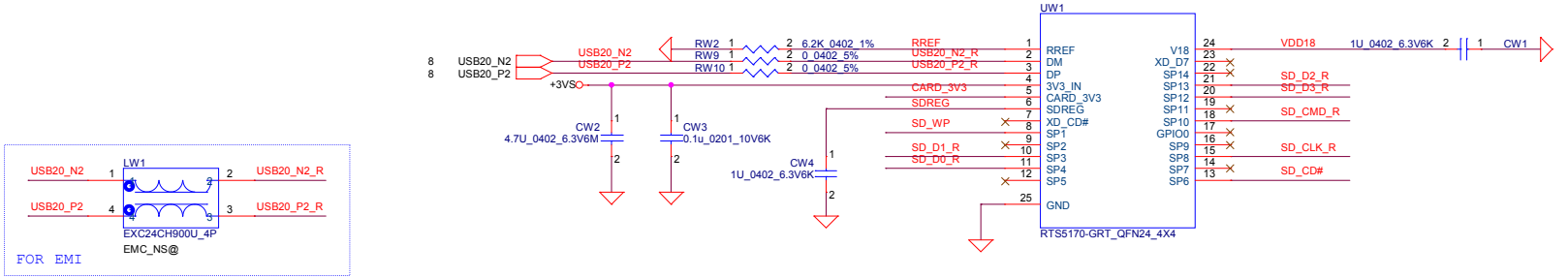

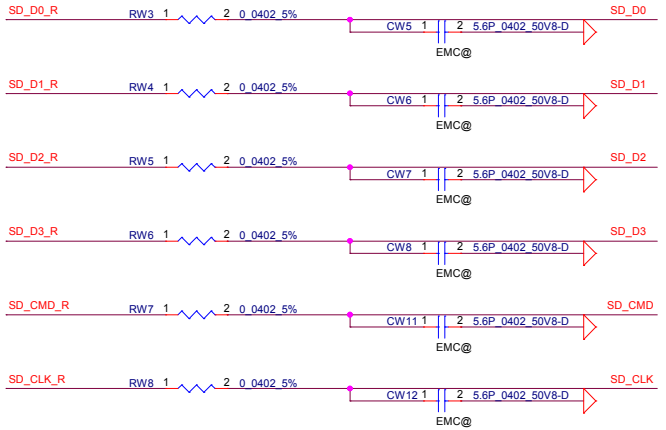

SD / MMC

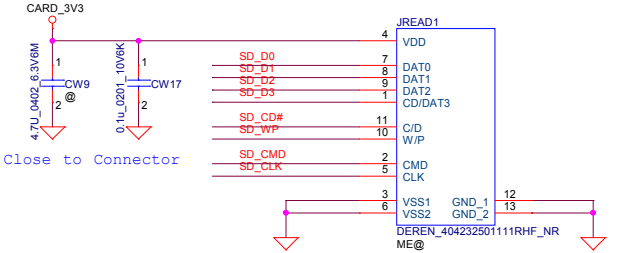

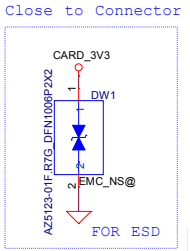

Security Classification	LC Future Center Secret Data		
Issued Date	2015/10/08	Deciphered Date	2015/03/23

THIS SHEET OF ENGINEERING DRAWING IS THE PROPRIETARY PROPERTY OF LC FUTURE CENTER. AND CONTAINS CONFIDENTIAL AND TRADE SECRET INFORMATION. THIS SHEET MAY NOT BE TRANSFERED FROM THE CUSTODY OF THE COMPETENT DIVISION OF R&D DEPARTMENT EXCEPT AS AUTHORIZED BY LC FUTURE CENTER NEITHER THIS SHEET NOR THE INFORMATION IT CONTAINS MAY BE USED BY OR DISCLOSED TO ANY THIRD PARTY WITHOUT PRIOR WRITTEN CONSENT OF LC FUTURE CENTER.

Title: **Cardreader**

Size: Custom | Document Number: CGx20 | Rev: 1.0

Date: Tuesday, December 08, 2015 | Sheet 30 of 57

Security Classification	LC Future Center Secret Data		
Issued Date	2015/10/08	Deciphered Date	2015/03/23

THIS SHEET OF ENGINEERING DRAWING IS THE PROPRIETARY PROPERTY OF LC FUTURE CENTER. AND CONTAINS CONFIDENTIAL AND TRADE SECRET INFORMATION. THIS SHEET MAY NOT BE TRANSFERED FROM THE CUSTODY OF THE COMPETENT DIVISION OF R&D DEPARTMENT EXCEPT AS AUTHORIZED BY LC FUTURE CENTER NEITHER THIS SHEET NOR THE INFORMATION IT CONTAINS MAY BE USED BY OR DISCLOSED TO ANY THIRD PARTY WITHOUT PRIOR WRITTEN CONSENT OF LC FUTURE CENTER.

Title

Blank

Size	Document Number	Rev
Custom	CGx20	1.0

Date: Tuesday, December 08, 2015 | Sheet 31 of 57

Security Classification	LC Future Center Secret Data		
Issued Date	2015/10/08	Deciphered Date	2015/03/23

THIS SHEET OF ENGINEERING DRAWING IS THE PROPRIETARY PROPERTY OF LC FUTURE CENTER. AND CONTAINS CONFIDENTIAL AND TRADE SECRET INFORMATION. THIS SHEET MAY NOT BE TRANSFERED FROM THE CUSTODY OF THE COMPETENT DIVISION OF R&D DEPARTMENT EXCEPT AS AUTHORIZED BY LC FUTURE CENTER NEITHER THIS SHEET NOR THE INFORMATION IT CONTAINS MAY BE USED BY OR DISCLOSED TO ANY THIRD PARTY WITHOUT PRIOR WRITTEN CONSENT OF LC FUTURE CENTER.

Title

Blank

Size	Document Number	Rev
Custom	CGx20	1.0

Date: Tuesday, December 08, 2015 | Sheet 32 of 57

LCD POWER CIRCUIT

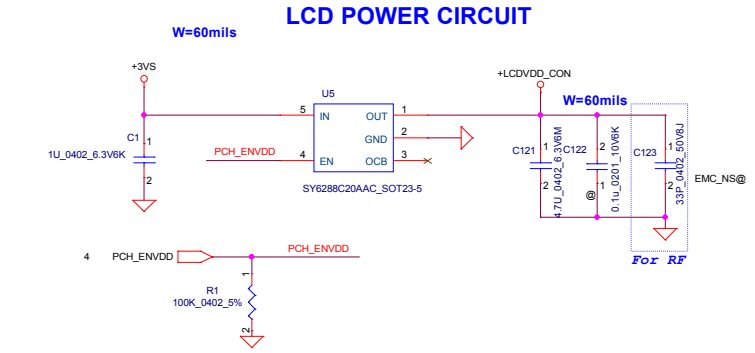

CMOS Camera

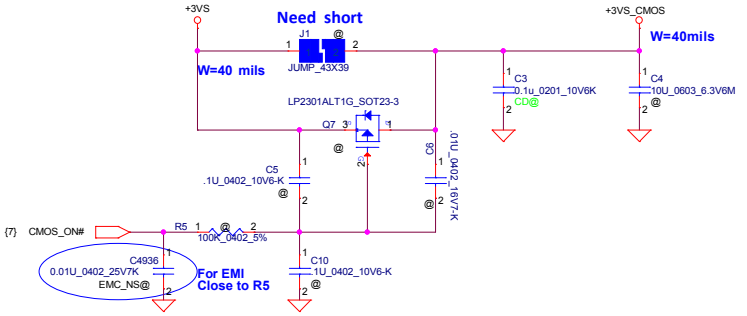

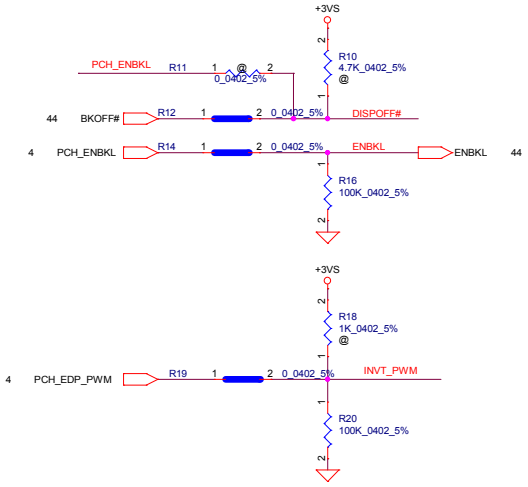

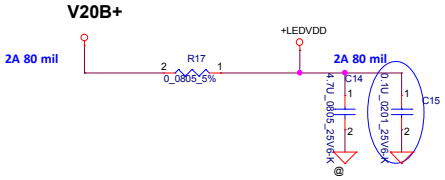

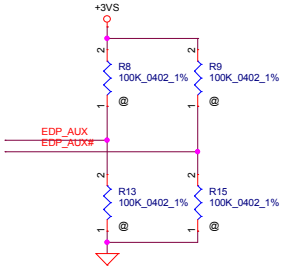

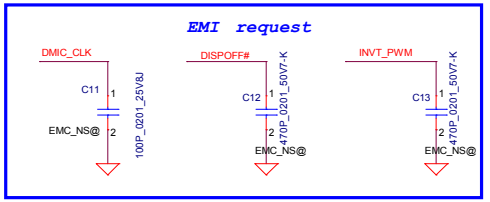

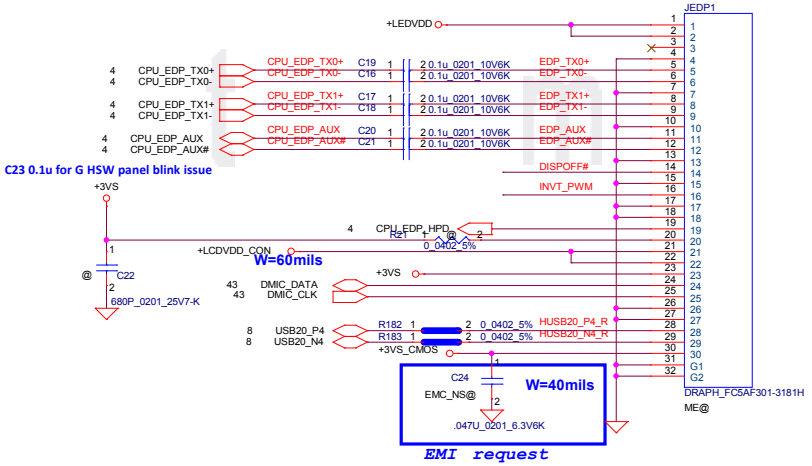

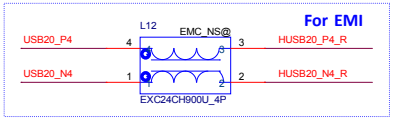

Security Classification	LC Future Center Secret Data		
Issued Date	2015/10/08	Deciphered Date	2015/03/23

THIS SHEET OF ENGINEERING DRAWING IS THE PROPRIETARY PROPERTY OF LC FUTURE CENTER. AND CONTAINS CONFIDENTIAL AND TRADE SECRET INFORMATION. THIS SHEET MAY NOT BE TRANSFERED FROM THE CUSTODY OF THE COMPETENT DIVISION OF R&D DEPARTMENT EXCEPT AS AUTHORIZED BY LC FUTURE CENTER NEITHER THIS SHEET NOR THE INFORMATION IT CONTAINS MAY BE USED BY OR DISCLOSED TO ANY THIRD PARTY WITHOUT PRIOR WRITTEN CONSENT OF LC FUTURE CENTER.

Title: eDP/ CMOS/Touch screen

Size: Custom | Document Number: CGx20 | Rev: 1.0

Date: Tuesday, December 08, 2015 | Sheet 33 of 57

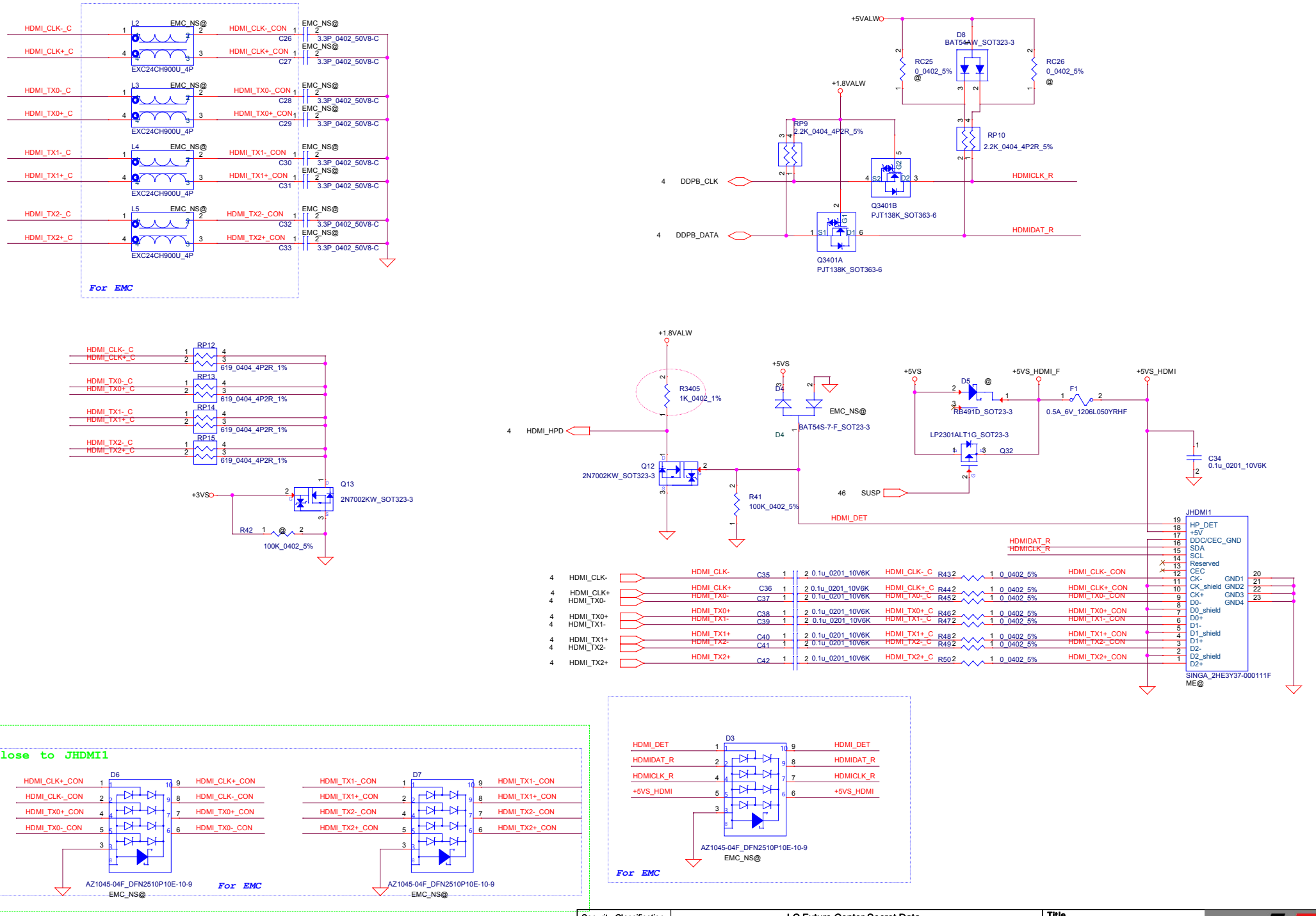

Security Classification	LC Future Center Secret Data		
Issued Date	2015/10/08	Deciphered Date	2015/03/23

THIS SHEET OF ENGINEERING DRAWING IS THE PROPRIETARY PROPERTY OF LC FUTURE CENTER. AND CONTAINS CONFIDENTIAL AND TRADE SECRET INFORMATION. THIS SHEET MAY NOT BE TRANSFERED FROM THE CUSTODY OF THE COMPETENT DIVISION OF R&D DEPARTMENT EXCEPT AS AUTHORIZED BY LC FUTURE CENTER NEITHER THIS SHEET NOR THE INFORMATION IT CONTAINS MAY BE USED BY OR DISCLOSED TO ANY THIRD PARTY WITHOUT PRIOR WRITTEN CONSENT OF LC FUTURE CENTER.

Title: **HDMI_CONN**

Size: Custom | Document Number: CGx20 | Rev: 1.0

Date: Tuesday, December 08, 2015 | Sheet 34 of 57

Security Classification	LC Future Center Secret Data		
Issued Date	2015/10/08	Deciphered Date	2015/03/23

THIS SHEET OF ENGINEERING DRAWING IS THE PROPRIETARY PROPERTY OF LC FUTURE CENTER. AND CONTAINS CONFIDENTIAL AND TRADE SECRET INFORMATION. THIS SHEET MAY NOT BE TRANSFERED FROM THE CUSTODY OF THE COMPETENT DIVISION OF R&D DEPARTMENT EXCEPT AS AUTHORIZED BY LC FUTURE CENTER NEITHER THIS SHEET NOR THE INFORMATION IT CONTAINS MAY BE USED BY OR DISCLOSED TO ANY THIRD PARTY WITHOUT PRIOR WRITTEN CONSENT OF LC FUTURE CENTER.

Title

DP to CRT Convert(IT6515FN)

Size	Document Number	Rev
Custom	CGx20	1.0

Date: Tuesday, December 08, 2015 | Sheet 35 of 57

Security Classification	LC Future Center Secret Data		
Issued Date	2015/10/08	Deciphered Date	2015/03/23

THIS SHEET OF ENGINEERING DRAWING IS THE PROPRIETARY PROPERTY OF LC FUTURE CENTER. AND CONTAINS CONFIDENTIAL AND TRADE SECRET INFORMATION. THIS SHEET MAY NOT BE TRANSFERED FROM THE CUSTODY OF THE COMPETENT DIVISION OF R&D DEPARTMENT EXCEPT AS AUTHORIZED BY LC FUTURE CENTER NEITHER THIS SHEET NOR THE INFORMATION IT CONTAINS MAY BE USED BY OR DISCLOSED TO ANY THIRD PARTY WITHOUT PRIOR WRITTEN CONSENT OF LC FUTURE CENTER.

Title

CRT

Size: Custom

Document Number: CGx20

Rev: 1.0

Date: Tuesday, December 08, 2015

+3VALW TO +3VALW_LAN

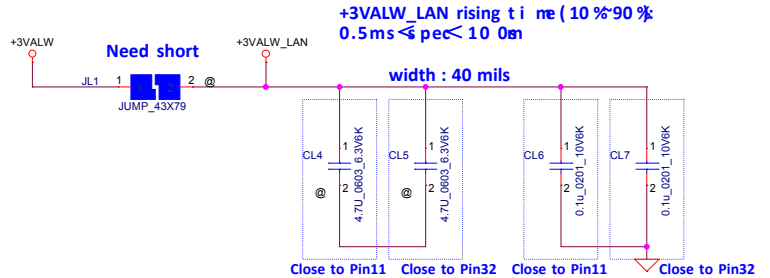

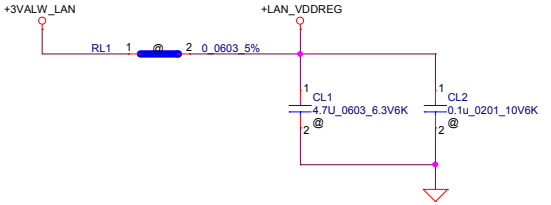

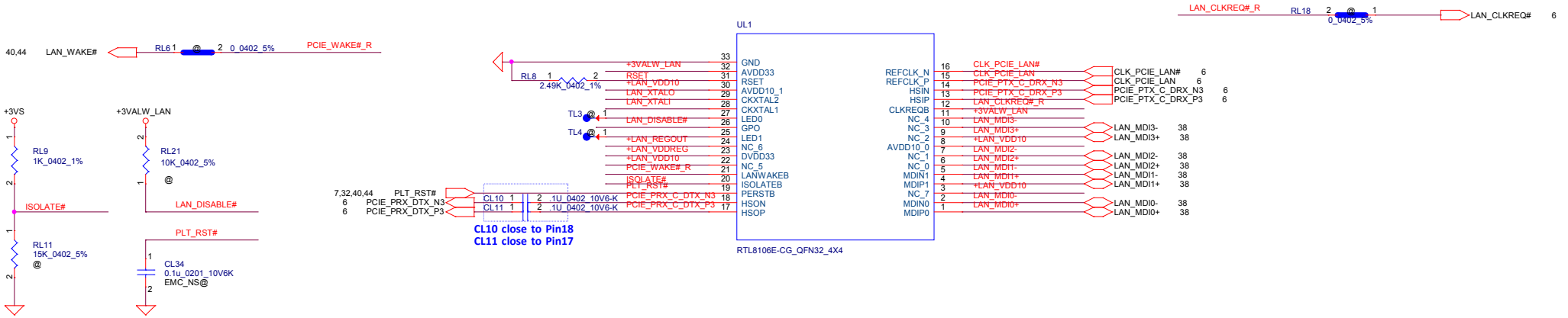

100M LAN

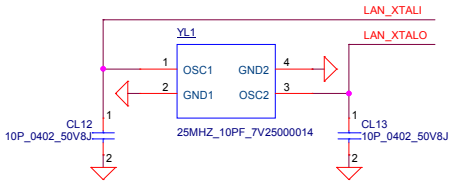

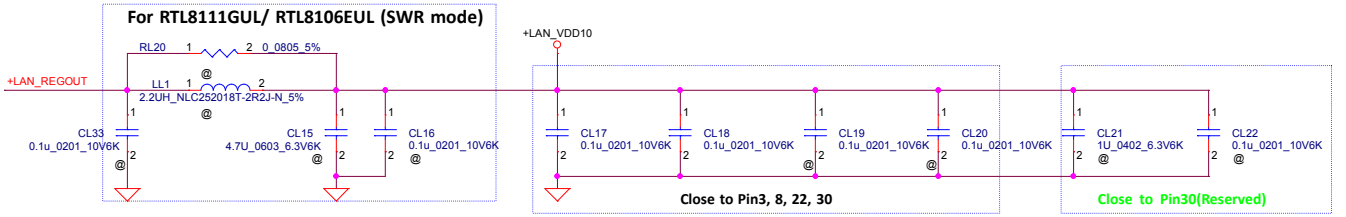

Layout Note: LL1 must be within 200mil to Pin24, CL15,CL16 must be within 200mil to LL1
+LAN_REGOUT: Width =60mil

Security Classification	LC Future Center Secret Data		
Issued Date	2015/10/08	Deciphered Date	2013/08/05

THIS SHEET OF ENGINEERING DRAWING IS THE PROPRIETARY PROPERTY OF LC FUTURE CENTER, AND CONTAINS CONFIDENTIAL AND TRADE SECRET INFORMATION. THIS SHEET MAY NOT BE TRANSFERED FROM THE CUSTODY OF THE COMPETENT DIVISION OF R&D DEPARTMENT EXCEPT AS AUTHORIZED BY LC FUTURE CENTER NEITHER THIS SHEET NOR THE INFORMATION IT CONTAINS MAY BE USED BY OR DISCLOSED TO ANY THIRD PARTY WITHOUT PRIOR WRITTEN CONSENT OF LC FUTURE CENTER.

Title: LAN_RTL8106EUL

Size: Custom | Document Number: CGx20 | Rev: 1.0

Date: Wednesday, December 09, 2015 | Sheet 37 of 57

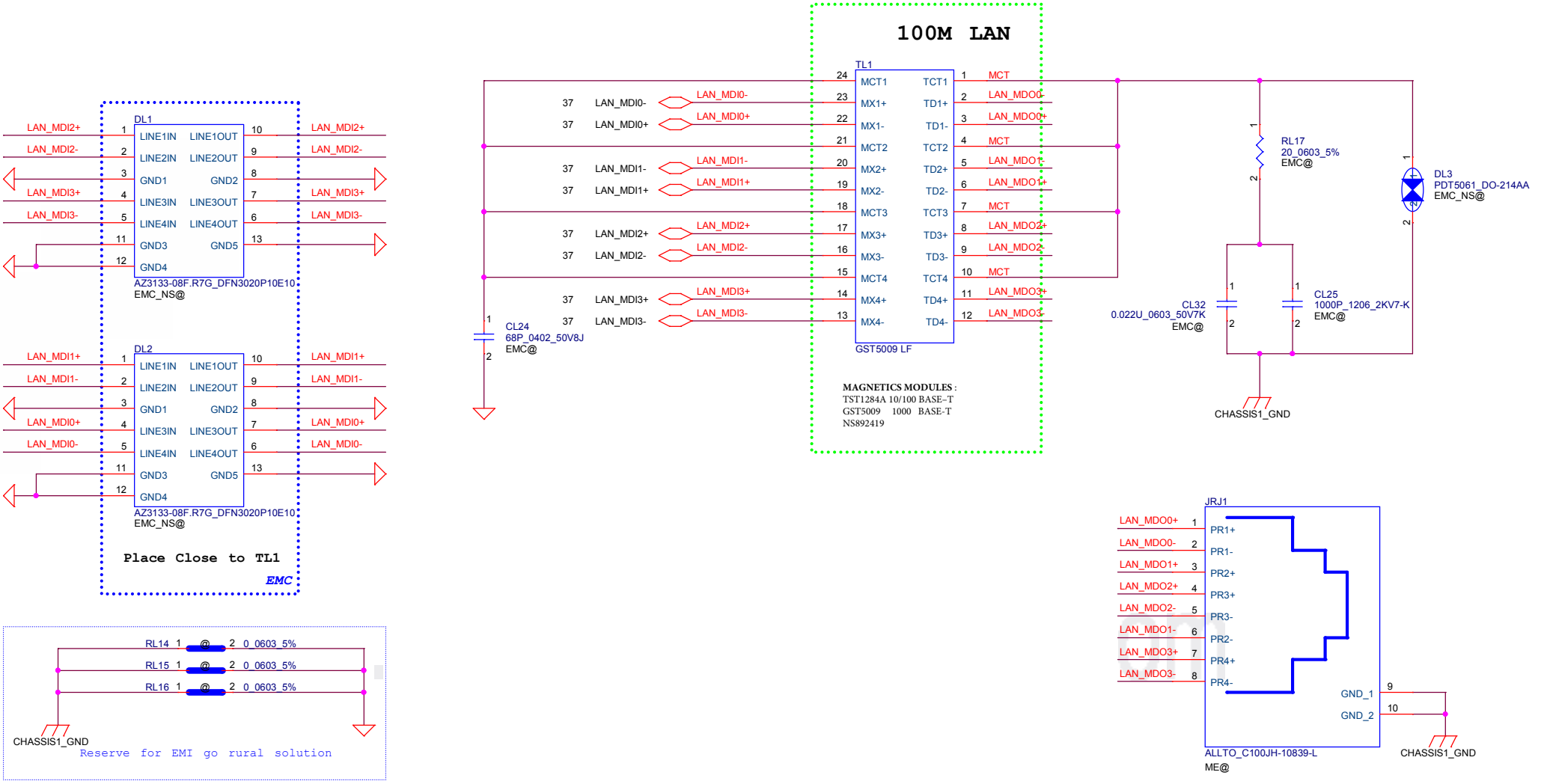

Security Classification	LC Future Center Secret Data		
Issued Date	2015/10/08	Deciphered Date	2013/08/05

THIS SHEET OF ENGINEERING DRAWING IS THE PROPRIETARY PROPERTY OF LC FUTURE CENTER. AND CONTAINS CONFIDENTIAL AND TRADE SECRET INFORMATION. THIS SHEET MAY NOT BE TRANSFERED FROM THE CUSTODY OF THE COMPETENT DIVISION OF R&D DEPARTMENT EXCEPT AS AUTHORIZED BY LC FUTURE CENTER NEITHER THIS SHEET NOR THE INFORMATION IT CONTAINS MAY BE USED BY OR DISCLOSED TO ANY THIRD PARTY WITHOUT PRIOR WRITTEN CONSENT OF LC FUTURE CENTER.

Title: LAN_Transformer

Size: B | Document Number: CGx20 | Rev: 1.0

Date: Tuesday, December 08, 2015 | Sheet 38 of 57

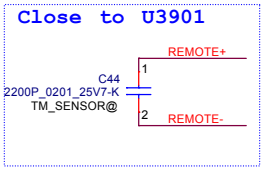

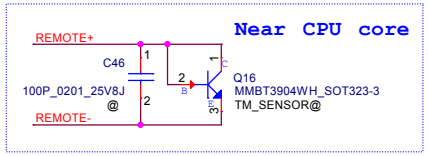

REMOTE+/-_R, REMOTE1+/-, REMOTE2+/-:
Trace width/space:10/10 mil
Trace length:<8"

Baytrail SOC use thermal sensor to read the thermal,
Baytrail don't has PECI signal

SMSC thermal sensor placed near DIMM

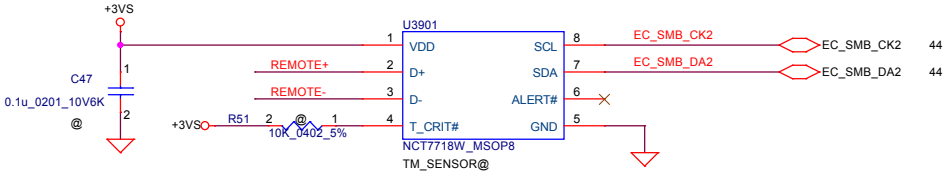

Address 1001_100xb

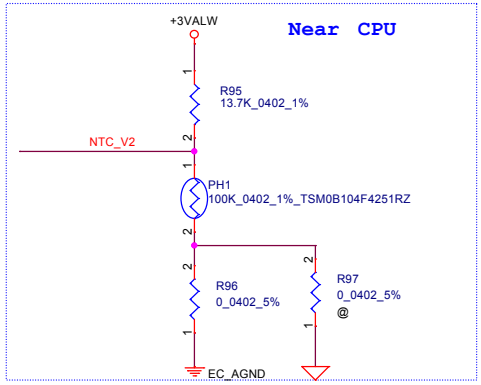

HW thermal sensor

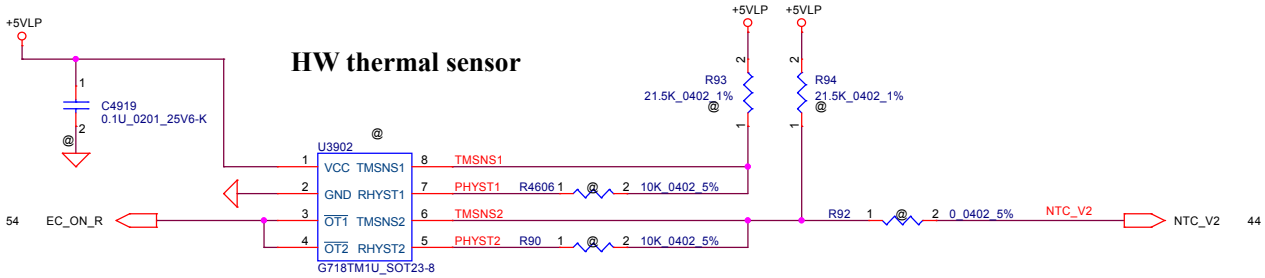

over temperature threshold:
RSET=3*RTMH
92+/-30C
Hysteresis temperature threshold.
RHYST=(RSET*RTML)/(3*RTML-RSET)
56+/-30C

FAN Conn

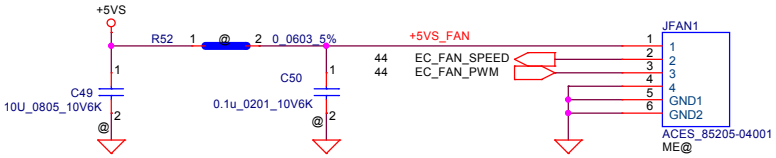

Security Classification	LC Future Center Secret Data		
Issued Date	2015/10/08	Deciphered Date	2015/03/23

THIS SHEET OF ENGINEERING DRAWING IS THE PROPRIETARY PROPERTY OF LC FUTURE CENTER. AND CONTAINS CONFIDENTIAL AND TRADE SECRET INFORMATION. THIS SHEET MAY NOT BE TRANSFERED FROM THE CUSTODY OF THE COMPETENT DIVISION OF R&D DEPARTMENT EXCEPT AS AUTHORIZED BY LC FUTURE CENTER NEITHER THIS SHEET NOR THE INFORMATION IT CONTAINS MAY BE USED BY OR DISCLOSED TO ANY THIRD PARTY WITHOUT PRIOR WRITTEN CONSENT OF LC FUTURE CENTER.

Title: *Thermal sensor/FAN CONN*

Size: Custom | Document Number: *CGx20* | Rev: 1.0

Date: Saturday, December 12, 2015 | Sheet 39 of 57

Mini-Express Card(WLAN/WiMAX)

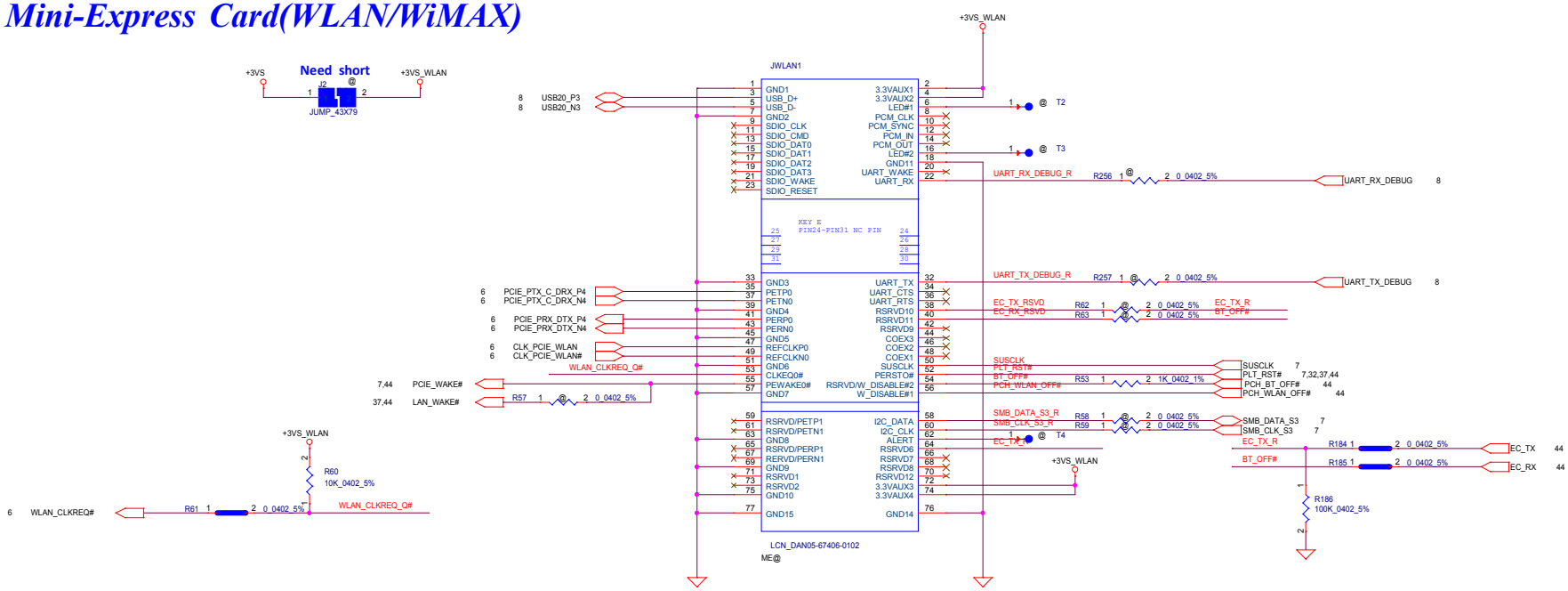

Security Classification	LC Future Center Secret Data		
Issued Date	2015/10/08	Deciphered Date	2015/03/23

THIS SHEET OF ENGINEERING DRAWING IS THE PROPRIETARY PROPERTY OF LC FUTURE CENTER, AND CONTAINS CONFIDENTIAL AND TRADE SECRET INFORMATION. THIS SHEET MAY NOT BE TRANSFERED FROM THE CUSTODY OF THE COMPETENT DIVISION OF R&D DEPARTMENT EXCEPT AS AUTHORIZED BY LC FUTURE CENTER NEITHER THIS SHEET NOR THE INFORMATION IT CONTAINS MAY BE USED BY OR DISCLOSED TO ANY THIRD PARTY WITHOUT PRIOR WRITTEN CONSENT OF LC FUTURE CENTER.

Title: NGFF WLAN

Size: Custom | Document Number: CGx20 | Rev: 1.0

Date: Tuesday, December 08, 2015 | Sheet 40 of 57

LEFT SIDE USB PORT X2

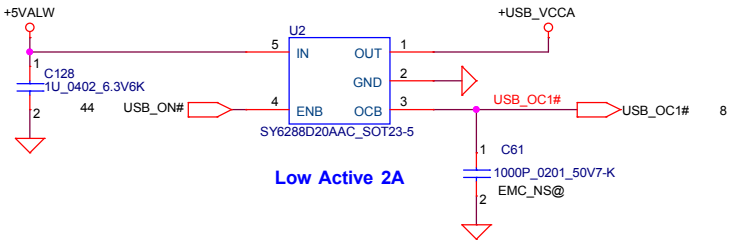

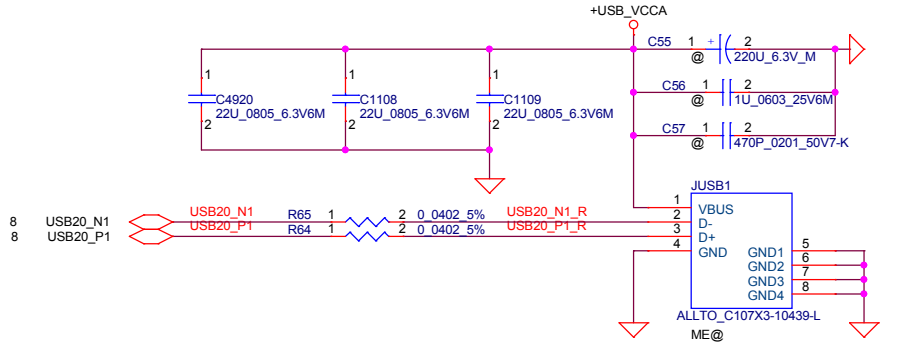

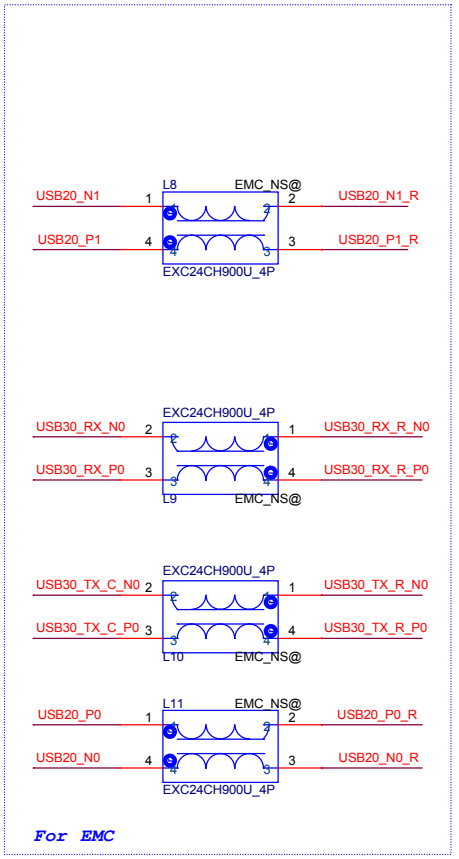

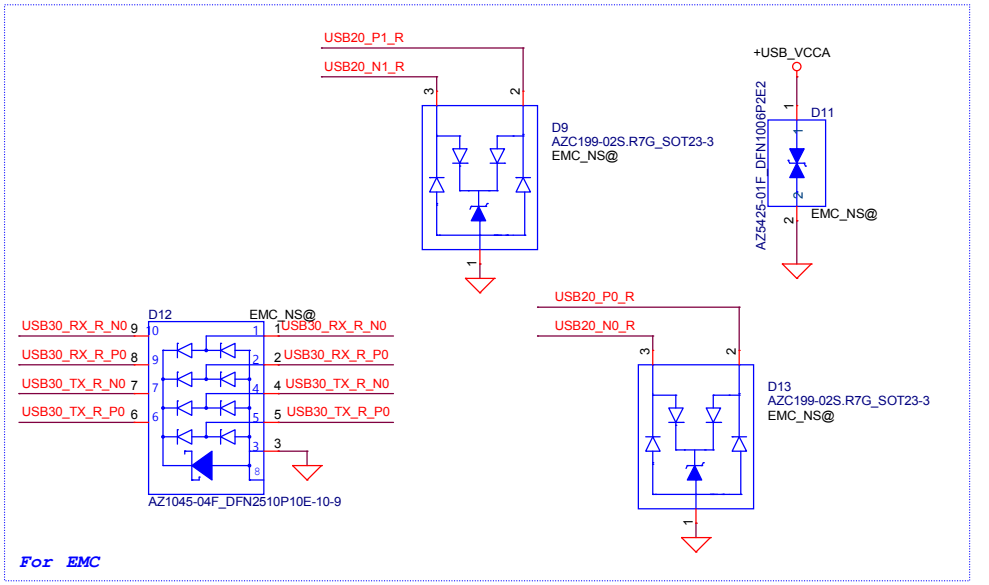

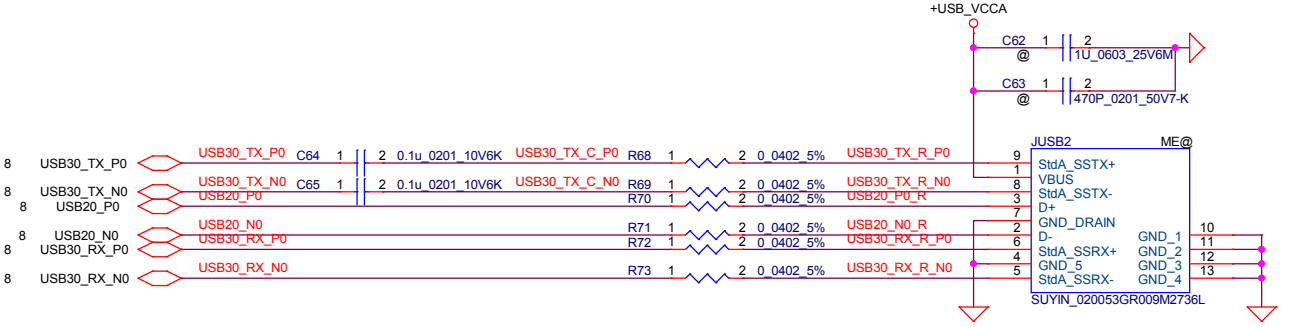

Security Classification	LC Future Center Secret Data		
Issued Date	2015/10/08	Deciphered Date	2013/08/05

THIS SHEET OF ENGINEERING DRAWING IS THE PROPRIETARY PROPERTY OF LC FUTURE CENTER. AND CONTAINS CONFIDENTIAL AND TRADE SECRET INFORMATION. THIS SHEET MAY NOT BE TRANSFERED FROM THE CUSTODY OF THE COMPETENT DIVISION OF R&D DEPARTMENT EXCEPT AS AUTHORIZED BY LC FUTURE CENTER NEITHER THIS SHEET NOR THE INFORMATION IT CONTAINS MAY BE USED BY OR DISCLOSED TO ANY THIRD PARTY WITHOUT PRIOR WRITTEN CONSENT OF LC FUTURE CENTER.

Title: USB2.0/USB3.0 PORT (LEFT)

Size: Custom | Document Number: CGx20 | Rev: 1.0

Date: Tuesday, December 08, 2015 | Sheet 41 of 57

SATA HDD Conn.

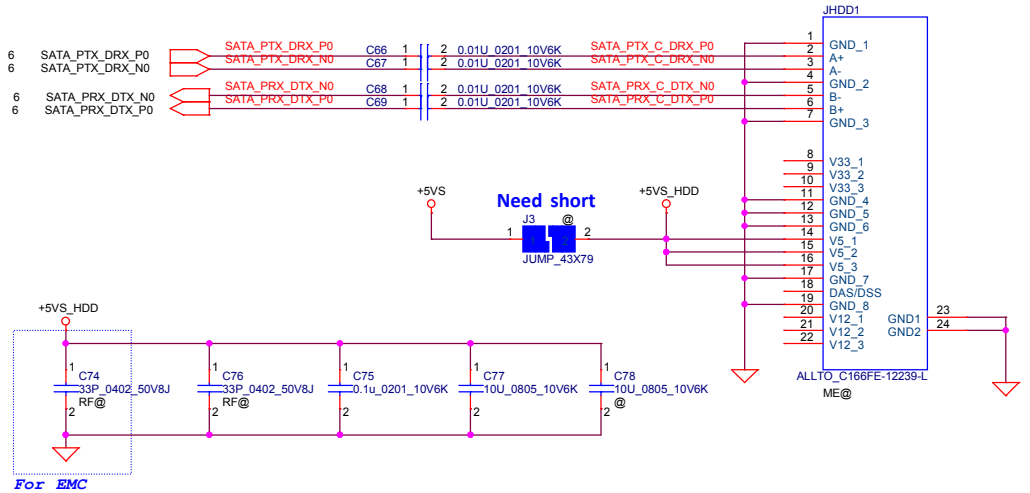

FOR 15"

SATA ODD FFC Conn

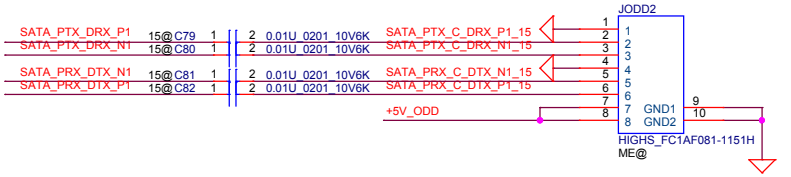

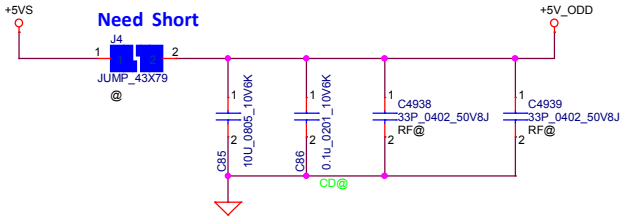

Security Classification	LC Future Center Secret Data		
Issued Date	2015/10/08	Deciphered Date	2015/03/23

THIS SHEET OF ENGINEERING DRAWING IS THE PROPRIETARY PROPERTY OF LC FUTURE CENTER. AND CONTAINS CONFIDENTIAL AND TRADE SECRET INFORMATION. THIS SHEET MAY NOT BE TRANSFERED FROM THE CUSTODY OF THE COMPETENT DIVISION OF R&D DEPARTMENT EXCEPT AS AUTHORIZED BY LC FUTURE CENTER NEITHER THIS SHEET NOR THE INFORMATION IT CONTAINS MAY BE USED BY OR DISCLOSED TO ANY THIRD PARTY WITHOUT PRIOR WRITTEN CONSENT OF LC FUTURE CENTER.

Title: **HDD/ODD CONN**

Size: Custom | Document Number: CGx20 | Rev: 1.0

Date: Saturday, December 12, 2015 | Sheet 42 of 57

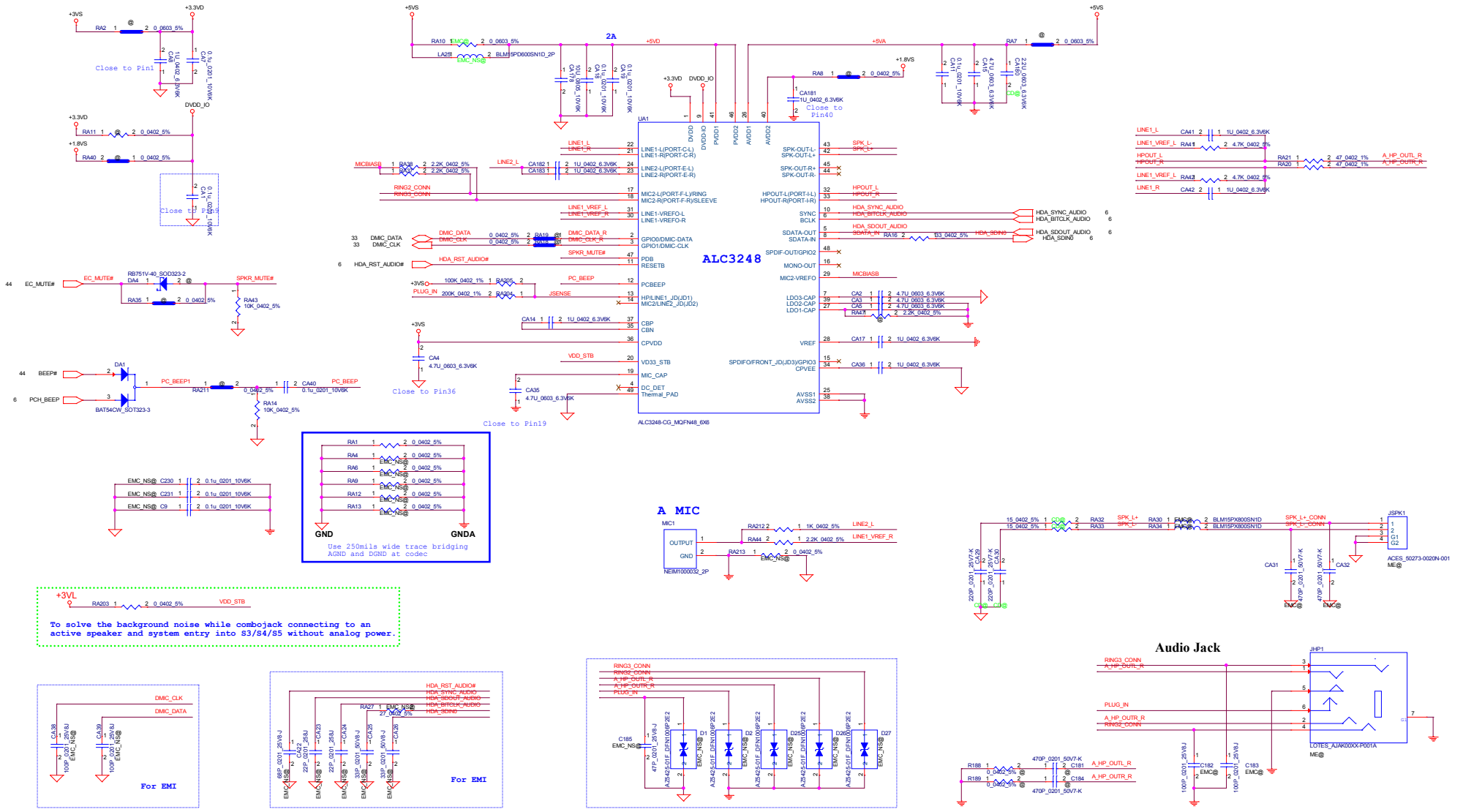

Security Classification	LC Future Center Secret Data		
Issued Date	2015/10/08	Deciphered Date	2015/03/23

THIS SHEET OF ENGINEERING DRAWING IS THE PROPRIETARY PROPERTY OF LC FUTURE CENTER, AND CONTAINS CONFIDENTIAL AND TRADE SECRET INFORMATION. THIS SHEET MAY NOT BE TRANSFERED FROM THE CUSTODY OF THE COMPETENT DIVISION OF R&D DEPARTMENT EXCEPT AS AUTHORIZED BY LC FUTURE CENTER NEITHER THIS SHEET NOR THE INFORMATION IT CONTAINS MAY BE USED BY OR DISCLOSED TO ANY THIRD PARTY WITHOUT PRIOR WRITTEN CONSENT OF LC FUTURE CENTER.

Title: P43-Codec_ALC3248

Size: Custom | Document Number: CGx20 | Rev: 1.0

Date: Saturday, December 12, 2015 | Sheet 43 of 57

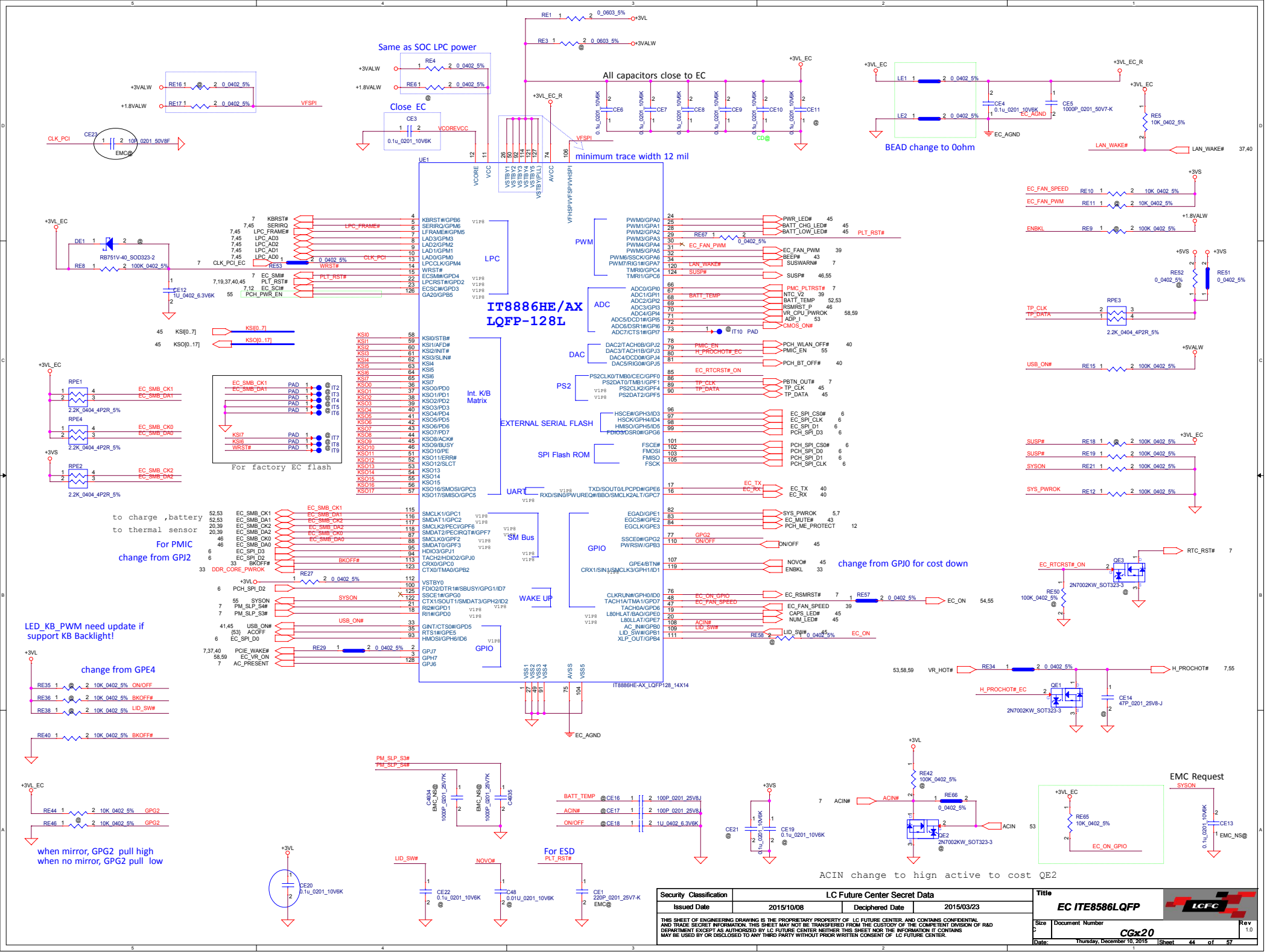

Security Classification	LC Future Center Secret Data		
Issued Date	2015/10/08	Deciphered Date	2015/03/23

THIS SHEET OF ENGINEERING DRAWING IS THE PROPRIETARY PROPERTY OF LC FUTURE CENTER, AND CONTAINS CONFIDENTIAL AND TRADE SECRET INFORMATION. THIS SHEET MAY NOT BE TRANSFERED FROM THE CUSTODY OF THE COMPETENT DIVISION OF R&D DEPARTMENT EXCEPT AS AUTHORIZED BY LC FUTURE CENTER NEITHER THIS SHEET NOR THE INFORMATION IT CONTAINS MAY BE USED BY OR DISCLOSED TO ANY THIRD PARTY WITHOUT PRIOR WRITTEN CONSENT OF LC FUTURE CENTER.

Title: EC ITE8586LQFP

Size: C | Document Number: CGx20 | Rev: 1.0

Date: Thursday, December 10, 2015 | Sheet 44 of 57

ON/OFF switch

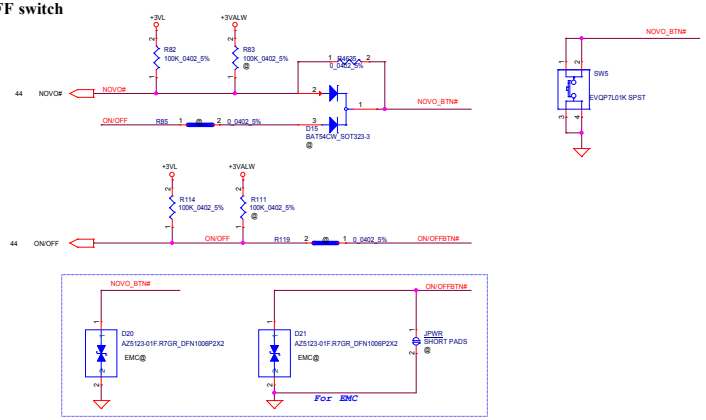

K/B Connector

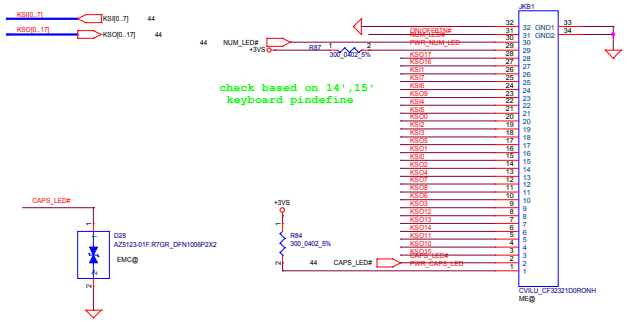

TP/B Connector

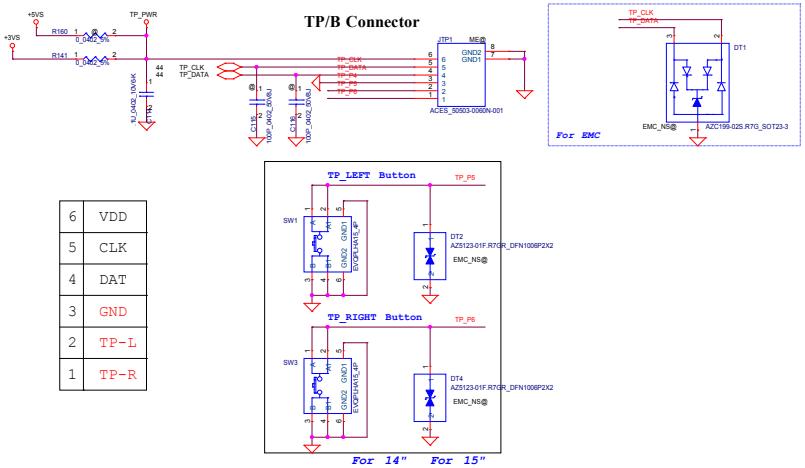

6	VDD
5	CLK
4	DAT
3	GND
2	TP-L
1	TP-R

Hall Sensor

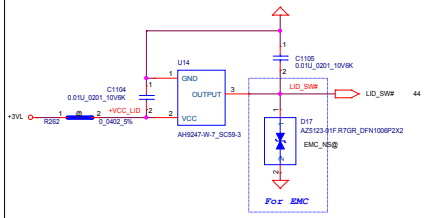

TPM

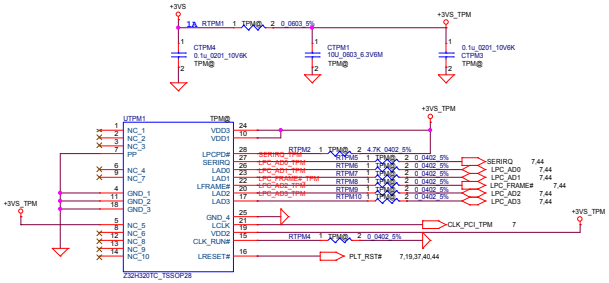

LED

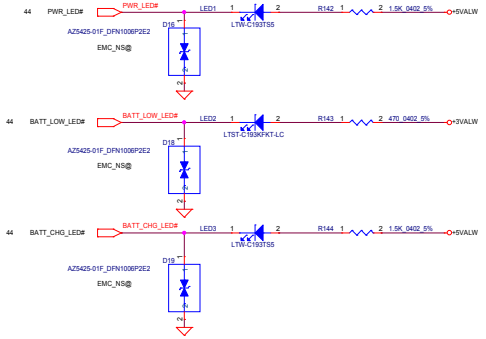

Security Classification	LC Future Center Secret Data		
Issued Date	2015/10/08	Deciphered Date	2015/03/23

THIS SHEET OF ENGINEERING DRAWING IS THE PROPRIETARY PROPERTY OF LC FUTURE CENTER AND CONTAINS CONFIDENTIAL AND TRADE SECRET INFORMATION. THIS SHEET MAY NOT BE TRANSFERRED FROM THE CUSTODY OF THE COMPETENT DIVISION OF R&D DEPARTMENT EXCEPT AS AUTHORIZED BY LC FUTURE CENTER,NEITHER THIS SHEET NOR THE INFORMATION IT CONTAINS MAY BE USED BY OR DISCLOSED TO ANY THIRD PARTY WITHOUT PRIOR WRITTEN CONSENT OF LC FUTURE CENTER.

Title: KBD/PWR/IO/LED/TP Conn.

Size: Custom | Document Number: CGx20 | Rev: 1.0

Date: Friday, December 11, 2015 | Sheet 45 of 57

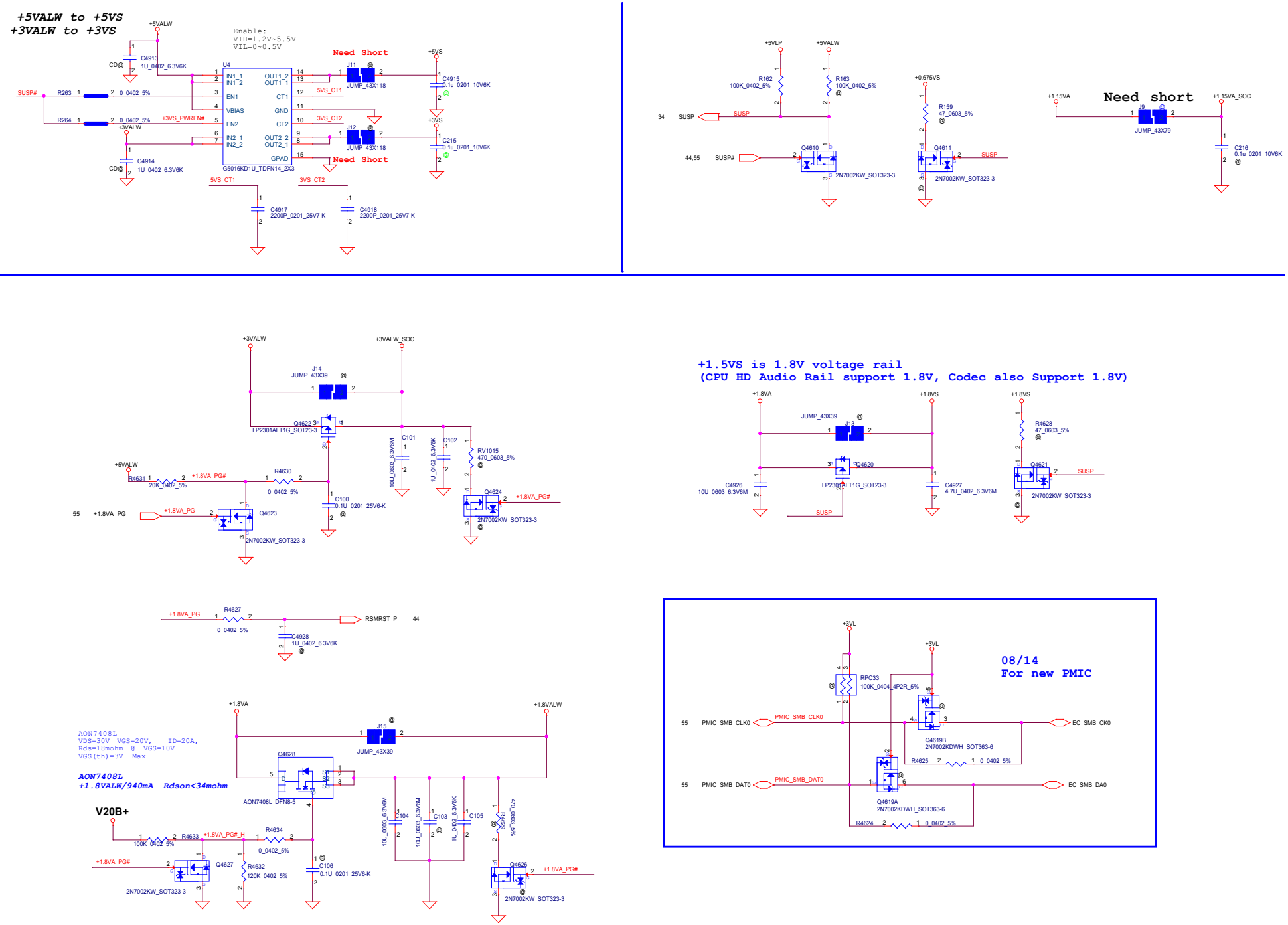

Security Classification	LC Future Center Secret Data		
Issued Date	2015/10/08	Deciphered Date	2015/03/23

THIS SHEET OF ENGINEERING DRAWING IS THE PROPRIETARY PROPERTY OF LC FUTURE CENTER, AND CONTAINS CONFIDENTIAL AND TRADE SECRET INFORMATION. THIS SHEET MAY NOT BE TRANSFERED FROM THE CUSTODY OF THE COMPETENT DIVISION OF R&D DEPARTMENT EXCEPT AS AUTHORIZED BY LC FUTURE CENTER NEITHER THIS SHEET NOR THE INFORMATION IT CONTAINS MAY BE USED BY OR DISCLOSED TO ANY THIRD PARTY WITHOUT PRIOR WRITTEN CONSENT OF LC FUTURE CENTER.

Title: DC V TO VS INTERFACE

Size: C | Document Number: CGx20 | Rev: 1.0

Date: Tuesday, December 08, 2015 | Sheet 46 of 57

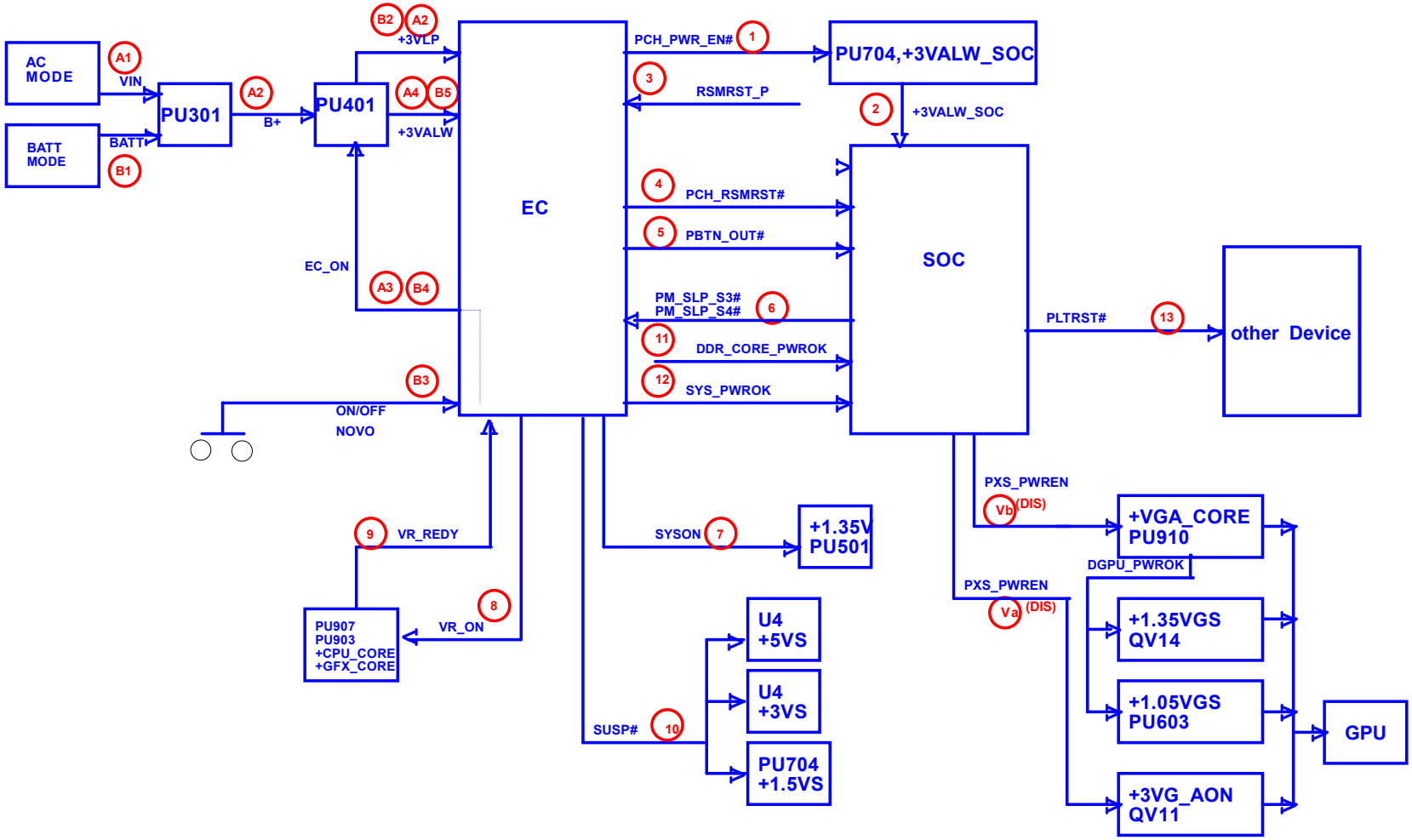

Security Classification	LC Future Center Secret Data		
Issued Date	2015/10/08	Deciphered Date	2015/03/23

THIS SHEET OF ENGINEERING DRAWING IS THE PROPRIETARY PROPERTY OF LC FUTURE CENTER. AND CONTAINS CONFIDENTIAL AND TRADE SECRET INFORMATION. THIS SHEET MAY NOT BE TRANSFERED FROM THE CUSTODY OF THE COMPETENT DIVISION OF R&D DEPARTMENT EXCEPT AS AUTHORIZED BY LC FUTURE CENTER NEITHER THIS SHEET NOR THE INFORMATION IT CONTAINS MAY BE USED BY OR DISCLOSED TO ANY THIRD PARTY WITHOUT PRIOR WRITTEN CONSENT OF LC FUTURE CENTER.

Title: *Power sequence Block*

Size: Custom | Document Number: CGx20 | Rev: 1.0

Date: Tuesday, December 08, 2015 | Sheet 47 of 57

Security Classification	LC Future Center Secret Data		
Issued Date	2015/10/08	Deciphered Date	2015/03/23

THIS SHEET OF ENGINEERING DRAWING IS THE PROPRIETARY PROPERTY OF LC FUTURE CENTER, AND CONTAINS CONFIDENTIAL AND TRADE SECRET INFORMATION. THIS SHEET MAY NOT BE TRANSFERED FROM THE CUSTODY OF THE COMPETENT DIVISION OF R&D DEPARTMENT EXCEPT AS AUTHORIZED BY LC FUTURE CENTER NEITHER THIS SHEET NOR THE INFORMATION IT CONTAINS MAY BE USED BY OR DISCLOSED TO ANY THIRD PARTY WITHOUT PRIOR WRITTEN CONSENT OF LC FUTURE CENTER.

Title

Virtual symbol

Size	Document Number	Rev
C	CGx20	1.0

Date: Tuesday, December 08, 2015 Sheet 48 of 57

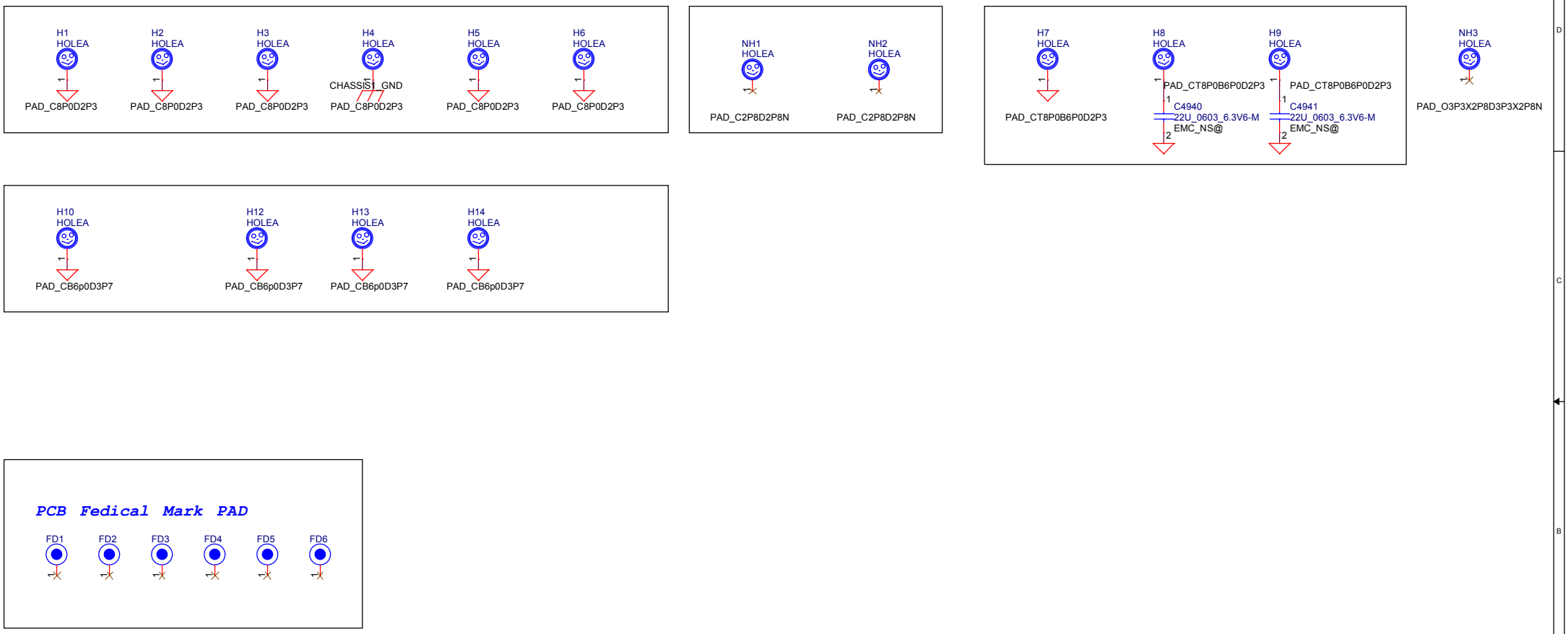

Security Classification	LC Future Center Secret Data		
Issued Date	2015/10/08	Deciphered Date	2015/03/23

THIS SHEET OF ENGINEERING DRAWING IS THE PROPRIETARY PROPERTY OF LC FUTURE CENTER. AND CONTAINS CONFIDENTIAL AND TRADE SECRET INFORMATION. THIS SHEET MAY NOT BE TRANSFERED FROM THE CUSTODY OF THE COMPETENT DIVISION OF R&D DEPARTMENT EXCEPT AS AUTHORIZED BY LC FUTURE CENTER NEITHER THIS SHEET NOR THE INFORMATION IT CONTAINS MAY BE USED BY OR DISCLOSED TO ANY THIRD PARTY WITHOUT PRIOR WRITTEN CONSENT OF LC FUTURE CENTER.

Title: *Hole*

Size: B

Document Number: *CGx20*

Rev: 1.0

Date: Friday, December 11, 2015

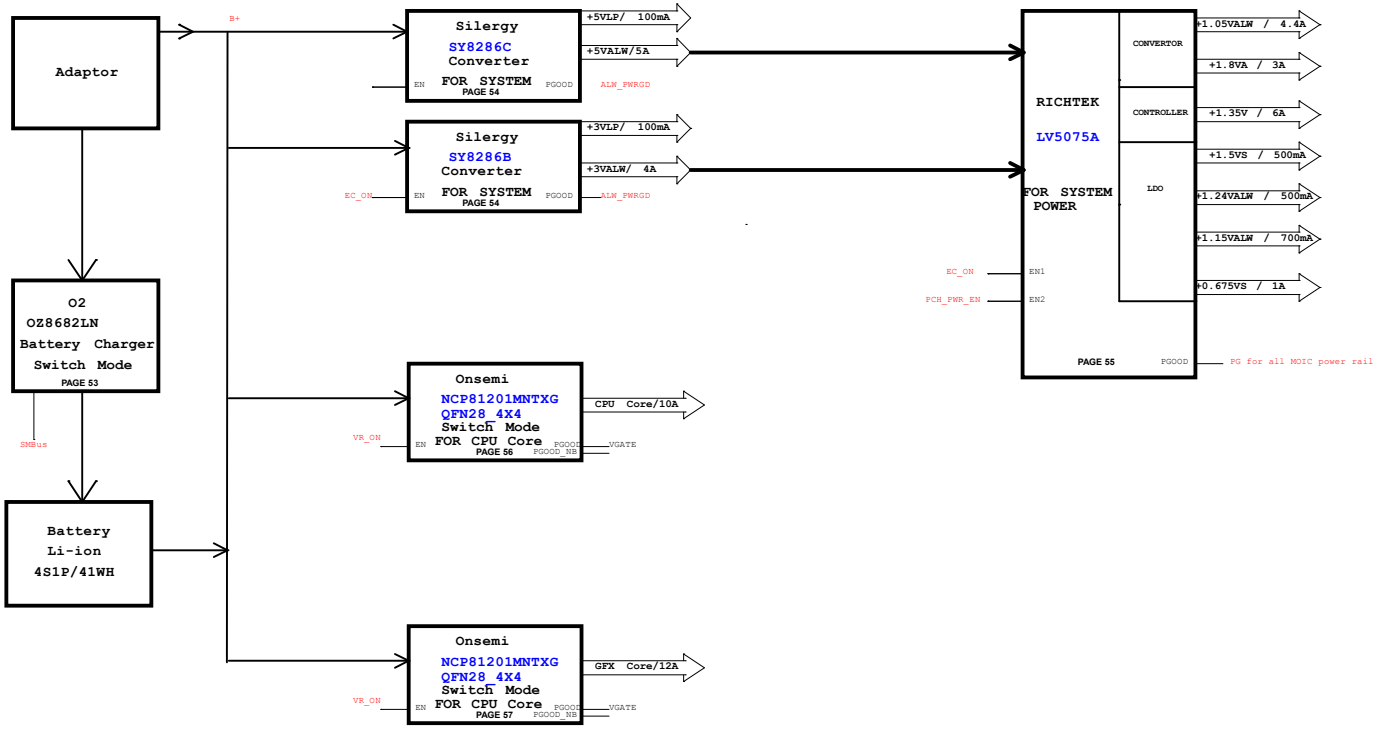

Security Classification	LC Future Center Secret Data			Title
Issued Date	2013/08/08	Deciphered Date	2013/08/05	Power Diagram
Size	Document Number			Rev.
P	CGx20			1.0
Date: Wednesday, December 09, 2015	Sheet 50 of 57			

THIS SHEET OF ENGINEERING DRAWING IS THE PROPRIETARY PROPERTY OF LC FUTURE CENTER, AND CONTAINS CONFIDENTIAL AND TRADE SECRET INFORMATION. THIS SHEET MAY NOT BE TRANSFERED FROM THE CUSTODY OF THE COMPETENT DIVISION OF R&D DEPARTMENT EXCEPT AS AUTHORIZED BY LC FUTURE CENTER NEITHER THIS SHEET NOR THE INFORMATION IT CONTAINS MAY BE USED BY OR DISCLOSED TO ANY THIRD PARTY WITHOUT PRIOR WRITTEN CONSENT OF LC FUTURE CENTER.

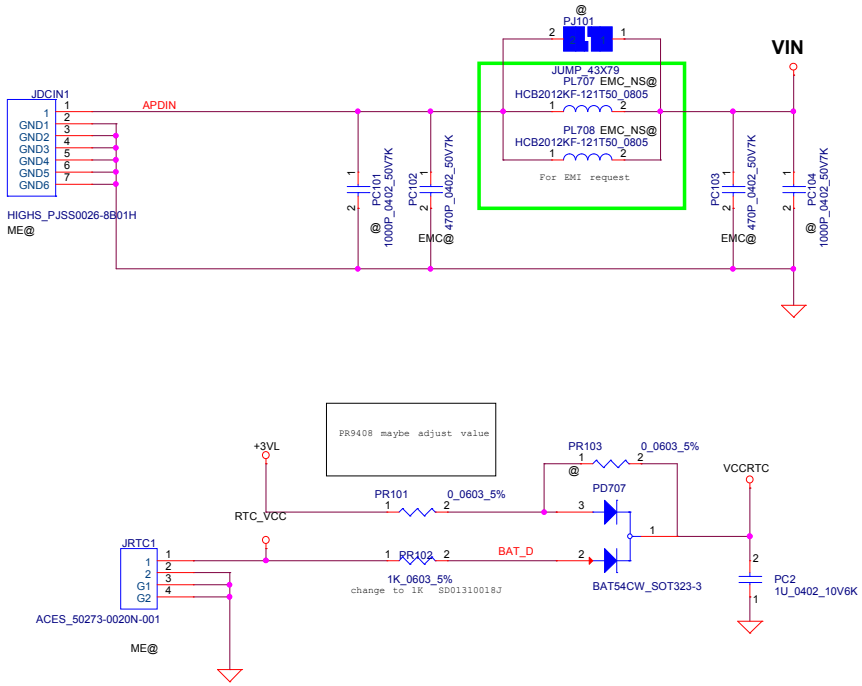

Security Classification	LC Future Center Secret Data		
Issued Date	2015/02/27	Deciphered Date	20140213

THIS SHEET OF ENGINEERING DRAWING IS THE PROPRIETARY PROPERTY OF LC FUTURE CENTER. AND CONTAINS CONFIDENTIAL AND TRADE SECRET INFORMATION. THIS SHEET MAY NOT BE TRANSFERED FROM THE CUSTODY OF THE COMPETENT DIVISION OF R&D DEPARTMENT EXCEPT AS AUTHORIZED BY LC FUTURE CENTER NEITHER THIS SHEET NOR THE INFORMATION IT CONTAINS MAY BE USED BY OR DISCLOSED TO ANY THIRD PARTY WITHOUT PRIOR WRITTEN CONSENT OF LC FUTURE CENTER.

Title
DCIN / RTC

Size: Custom | Document Number: CGx20 | Rev: 1.0

Date: Wednesday, December 09, 2015 | Sheet 51 of 57

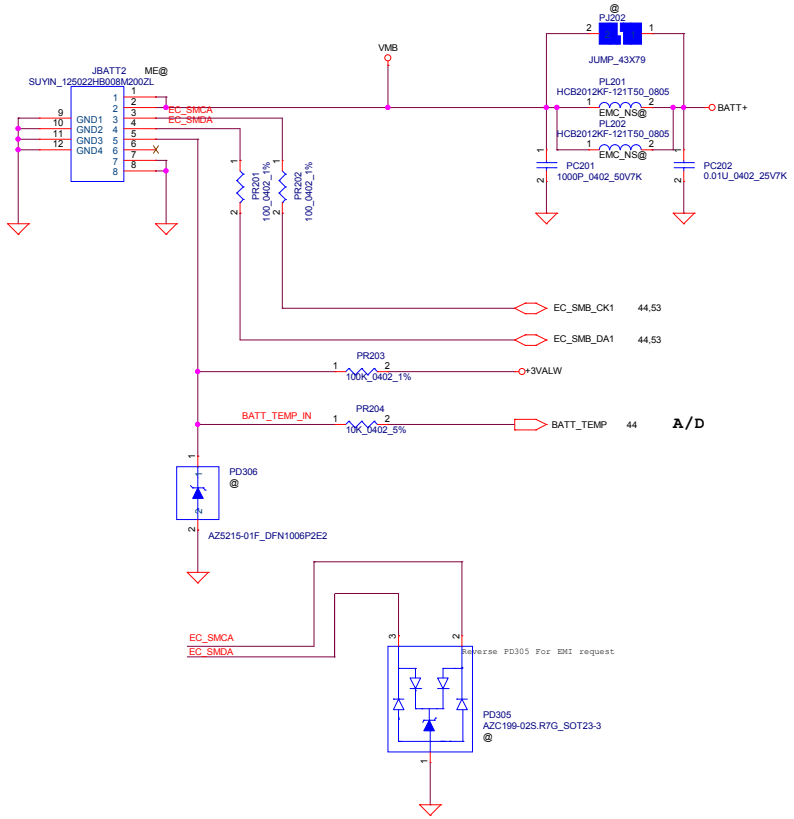

Security Classification	LC Future Center Secret Data		
Issued Date	2015/02/27	Deciphered Date	20140213

THIS SHEET OF ENGINEERING DRAWING IS THE PROPRIETARY PROPERTY OF LC FUTURE CENTER, AND CONTAINS CONFIDENTIAL AND TRADE SECRET INFORMATION. THIS SHEET MAY NOT BE TRANSFERED FROM THE CUSTODY OF THE COMPETENT DIVISION OF R&D DEPARTMENT EXCEPT AS AUTHORIZED BY LC FUTURE CENTER NEITHER THIS SHEET NOR THE INFORMATION IT CONTAINS MAY BE USED BY OR DISCLOSED TO ANY THIRD PARTY WITHOUT PRIOR WRITTEN CONSENT OF LC FUTURE CENTER.

Title
BATTERY CONN/OTP

LCFC

Size	Document Number	Rev
Custom	CGx20	1.0

Date: Wednesday, December 08, 2015 | Sheet 52 of 57

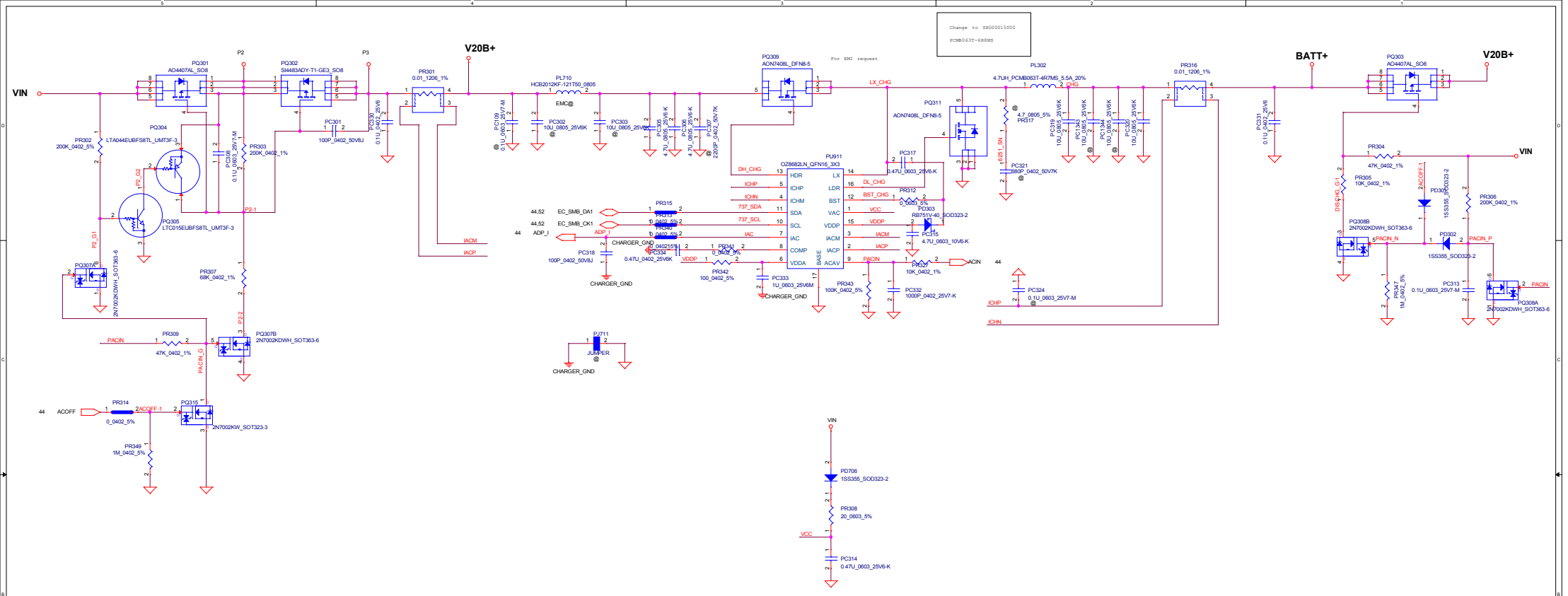

Security Classification	LC Future Center Secret Data		
Issued Date	2015/02/27	Deciphered Date	20140213

THIS SHEET OF ENGINEERING DRAWING IS THE PROPRIETARY PROPERTY OF LC FUTURE CENTER, AND CONTAINS CONFIDENTIAL AND TRADE SECRET INFORMATION. THIS SHEET MAY NOT BE TRANSFERED FROM THE CUSTODY OF THE COMPETENT DIVISION OF R&D DEPARTMENT EXCEPT AS AUTHORIZED BY LC FUTURE CENTER NEITHER THIS SHEET NOR THE INFORMATION IT CONTAINS MAY BE USED BY OR DISCLOSED TO ANY THIRD PARTY WITHOUT PRIOR WRITTEN CONSENT OF LC FUTURE CENTER.

Title: **CHARGER**

Size	Document Number	Rev
Custom	CGx20	1.0

Date: Wednesday, December 09, 2015 Sheet 53 of 57

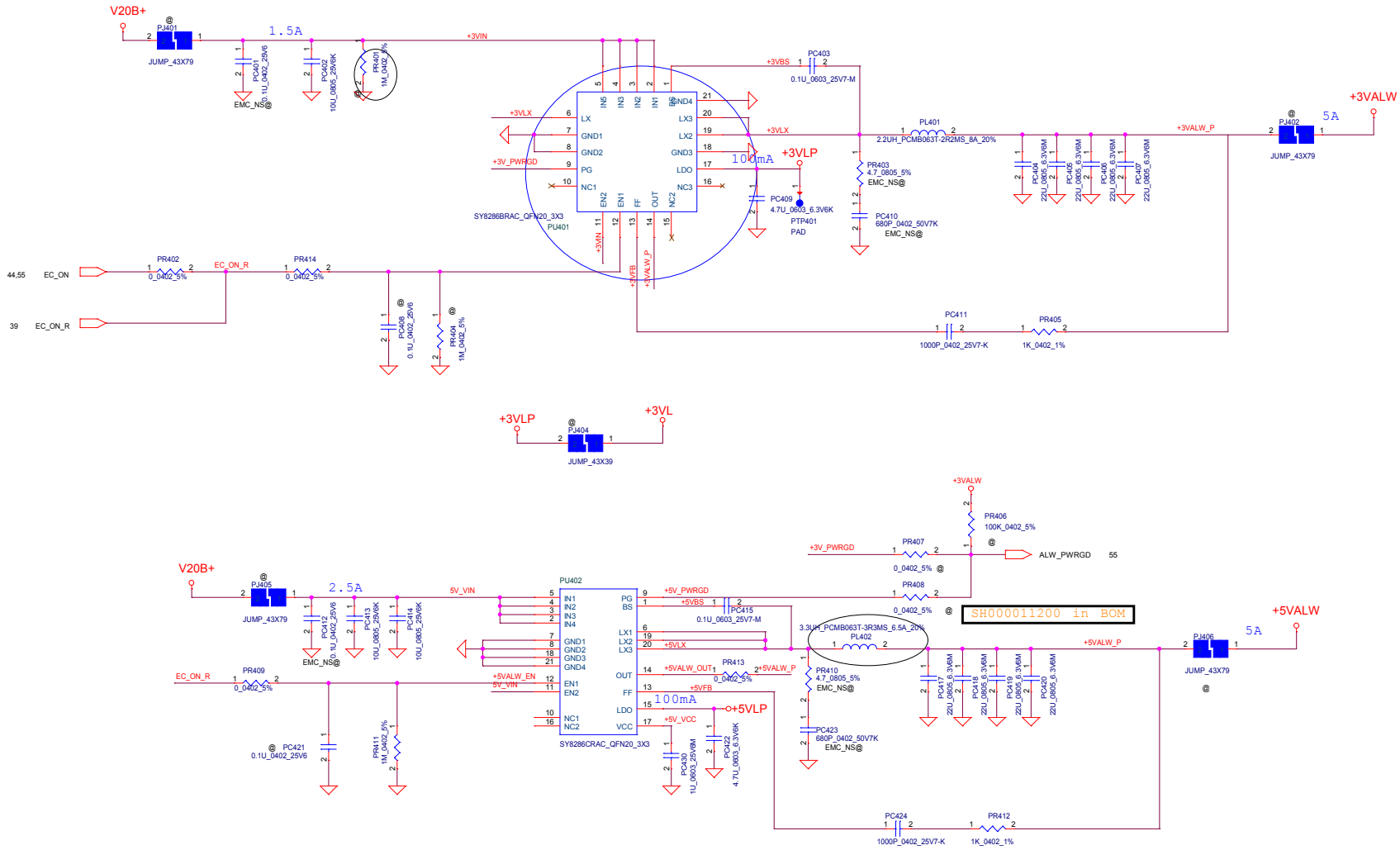

Security Classification	LC Future Center Secret Data		
Issued Date	2013/08/08	Deciphered Date	2013/08/05

THIS SHEET OF ENGINEERING DRAWING IS THE PROPRIETARY PROPERTY OF LC FUTURE CENTER, AND CONTAINS CONFIDENTIAL AND TRADE SECRET INFORMATION. THIS SHEET MAY NOT BE TRANSFERED FROM THE CUSTODY OF THE COMPETENT DIVISION OF R&D DEPARTMENT EXCEPT AS AUTHORIZED BY LC FUTURE CENTER NEITHER THIS SHEET NOR THE INFORMATION IT CONTAINS MAY BE USED BY OR DISCLOSED TO ANY THIRD PARTY WITHOUT PRIOR WRITTEN CONSENT OF LC FUTURE CENTER.

Title: **PWR_3VALW/5VALW**

Size	Document Number	Rev
C	CGx20	1.0

Date: Wednesday, December 09, 2015 Sheet 54 of 57

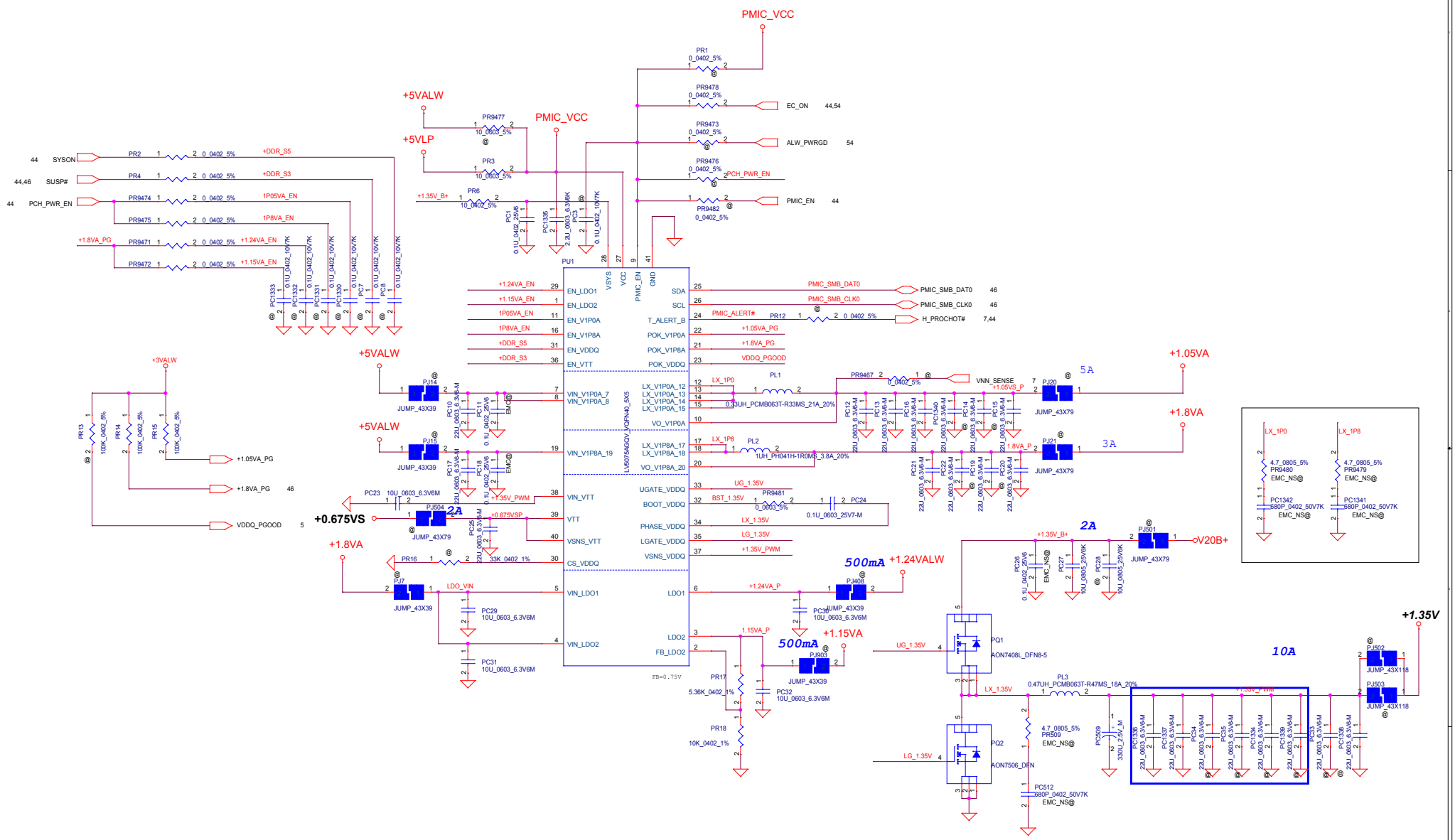

Security Classification	LC Future Center Secret Data		
Issued Date	2013/08/08	Deciphered Date	2013/08/05

THIS SHEET OF ENGINEERING DRAWING IS THE PROPRIETARY PROPERTY OF LC FUTURE CENTER, AND CONTAINS CONFIDENTIAL AND TRADE SECRET INFORMATION. THIS SHEET MAY NOT BE TRANSFERED FROM THE CUSTODY OF THE COMPETENT DIVISION OF R&D DEPARTMENT EXCEPT AS AUTHORIZED BY LC FUTURE CENTER NEITHER THIS SHEET NOR THE INFORMATION IT CONTAINS MAY BE USED BY OR DISCLOSED TO ANY THIRD PARTY WITHOUT PRIOR WRITTEN CONSENT OF LC FUTURE CENTER.

Title: **PWR-SYSTEM POWER**

Size: C | Document Number: CGx20 | Rev: 1.0

Date: Wednesday, December 09, 2015 | Sheet 55 of 57

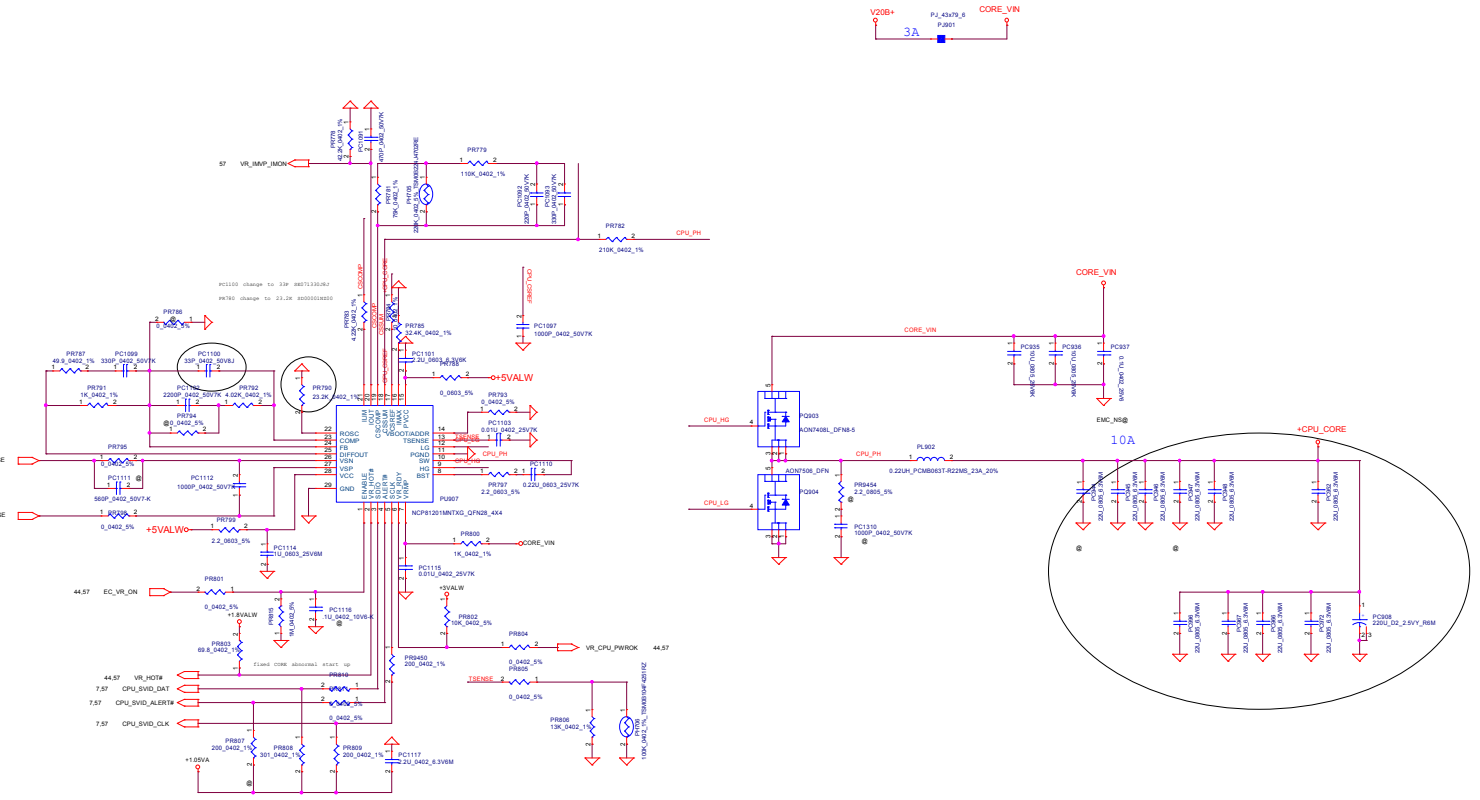

Security Classification	LC Future Center Secret Data			Title
Issued Date	2012/09/03	Deciphered Date	2012/09/03	PWR_CPU_CORE/GFX_CORE

THIS SHEET OF ENGINEERING DRAWING IS THE PROPRIETARY PROPERTY OF LC FUTURE CENTER, AND CONTAINS CONFIDENTIAL AND TRADE SECRET INFORMATION. THIS SHEET MAY NOT BE TRANSFERRED FROM THE CUSTODY OF THE COMPETENT DIVISION OF R&D DEPARTMENT EXCEPT AS AUTHORIZED BY LC FUTURE CENTER NEITHER THIS SHEET NOR THE INFORMATION IT CONTAINS MAY BE USED BY OR DISCLOSED TO ANY THIRD PARTY WITHOUT PRIOR WRITTEN CONSENT OF LC FUTURE CENTER.

Size	Document Number	Rev
P	CGx20	1.0

Date: Wednesday, December 09, 2015 Sheet 58 of 57

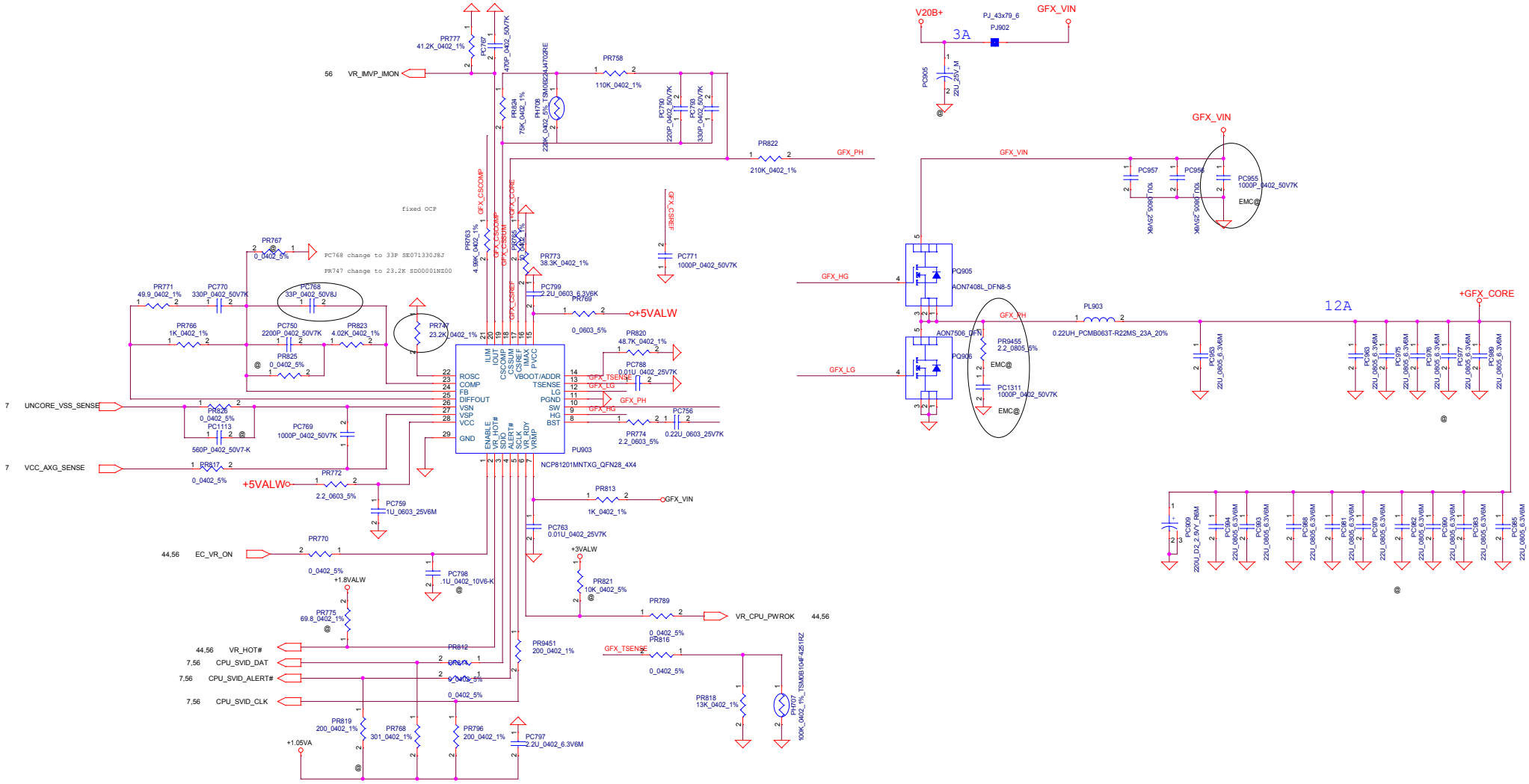

Security Classification	LC Future Center Secret Data		
Issued Date	2013/11/08	Deciphered Date	2013/11/08

THIS SHEET OF ENGINEERING DRAWING IS THE PROPRIETARY PROPERTY OF LC FUTURE CENTER, AND CONTAINS CONFIDENTIAL AND TRADE SECRET INFORMATION. THIS SHEET MAY NOT BE TRANSFERED FROM THE CUSTODY OF THE COMPETENT DIVISION OF R&D DEPARTMENT EXCEPT AS AUTHORIZED BY LC FUTURE CENTER NEITHER THIS SHEET NOR THE INFORMATION IT CONTAINS MAY BE USED BY OR DISCLOSED TO ANY THIRD PARTY WITHOUT PRIOR WRITTEN CONSENT OF LC FUTURE CENTER.

Title: **PWR_GFX Core**

Size	Document Number	Rev
C	CGx20	1.0

Date: Thursday, December 10, 2015 Sheet 57 of 57